CFD-460

SERVICE MANUAL

US Model
Canadian Model

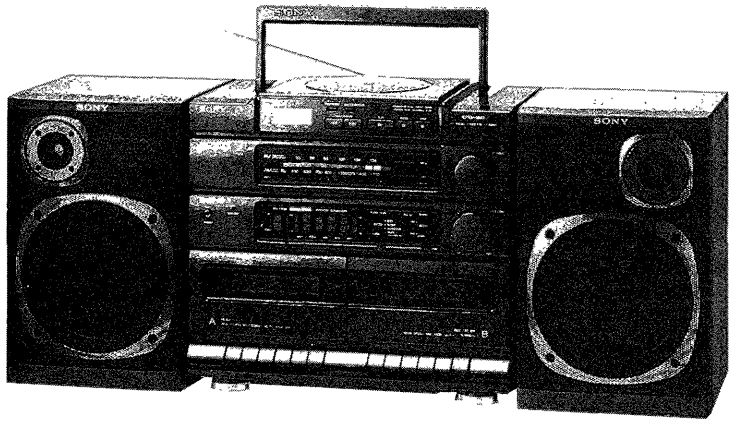

SPECIFICATIONS

AUDIO POWER SPECIFICATIONS

With 3.2-ohm loads, both channels driven from 150–10,000 Hz: rated 4 W, per channel minimum RMS power, with no more than 10% total harmonic distortion in AC operation.

OTHER SPECIFICATIONS

CD player section

System	Compact disc digital audio system
Laser diode properties	Material: GaAlAs Wavelength: 780 nm Emission duration: Continuous Laser output power: less than 44.6 μW* *This output is the value measured at a distance of 200 mm from the objective lens surface on the optical pick-up block.
Spindle speed	12 cm CD: Approx. 200 to 500 r.p.m. (CLV) 8 cm CD: Approx. 300 to 500 r.p.m. (CLV)
Error correction	Sony Super Strategy Cross Interleave Reed Solomon Code
Number of channels	2
Frequency response	20–20,000 Hz: ±½ dB
Wow and flutter	Below measurable limit

Radio section

Frequency range	FM: 87.6–108 MHz AM: 530–1,710 kHz
Antennas	FM: Telescopic antenna AM: Built-in ferrite bar antenna

Tape recorder section and general

Recording system	4-track 2-channel stereo
Fast winding time	Approx. 2 min. with Sony cassette C60
Frequency response	With TYPE I (NORMAL) cassette: 80–10,000 Hz

Model Name Using Similar Mechanism	CD Section	CFD-454/455
	Tape Section	CFS-W304
Optical Device Name		KSM-150BG
Tape Transport Mechanism Type		MF-460-64

Speakers	Woofer: 12 cm dia., cone type Tweeter: 2 cm dia.
Power output	Model for Canada: 4.3 W + 4.3 W (at 3.2 ohms, 315 Hz, 10% harmonic distortion)
Inputs	External microphone input jack (minijack) Sensitivity 0.78 mV For low impedance microphone
Outputs	Headphones jack (stereo minijack) For 16–68 ohms impedance headphones
Power requirements	120V AC, 60 Hz DC 12V, 8 size D (R20) batteries
Power consumption	AC 21W (for US model) AC 25W (for Canadian model)

Battery life

Batteries	Sony SUM-1 (NS)	Sony Alkaline AM1
FM recording	Approx. 15 hrs	Approx. 35 hrs
Disc playing	Approx. 6 hrs	Approx. 16 hrs

Dimensions	677 × 292 × 194 mm (w/h/d) (26¾ × 11½ × 7¾ inches) incl. projecting parts and controls
Weight	7.7 kg (16 lb 15 oz) incl. batteries
Accessory supplied	AC power cord (1)

Design and specifications subject to change without notice.

CD RADIO CASSETTE-CORDER

SONY®

TABLE OF CONTENTS

Section	Title	Page
1. GENERAL		
	Parts Identification	4
2. DISASSEMBLY		
2-1.	Front Cabinet Assy	5
2-2.	Handle	5
2-3.	Pointer Setting	5
3. MECHANICAL ADJUSTMENTS		6
4. ELECTRICAL ADJUSTMENTS		
4-1.	Tape Recorder Section	6
4-2.	Radio Section	7
4-3.	CD Section	9
5. DIAGRAMS		
5-1.	Circuit Boards Location	13
5-2.	Semiconductor Lead Layout	14
5-3.	Block Diagram	15
5-4.	Printed Wiring Board—Tuner, Audio Section—	18
5-5.	Schematic Diagram —Tuner Section—	21
5-6.	Schematic Diagram —Audio Section—	23
5-7.	Schematic Diagram —CD Section—	28
5-8.	Printed Wiring Board —CD Section—	31
6. EXPLODED VIEWS		
6-1.	Front Cabinet Assembly	34
6-2.	Rear Cabinet Assembly	35
6-3.	CD Unit Assembly	36
6-4.	Optical Block	37
6-5.	Mechanism Block (1) (Deck A)	38
6-6.	Mechanism Block (2) (Deck A)	39
6-7.	Mechanism Block (3) (Deck B)	40
6-8.	Mechanism Block (4) (Deck B)	41
6-9.	Ppeaker Assembly	42
7. ELECTRICAL PARTS LIST		43

SAFETY-RELATED COMPONENT WARNING!!

COMPONENTS IDENTIFIED BY MARK ⚠ OR DOTTED LINE WITH MARK ⚠ ON THE SCHEMATIC DIAGRAMS AND IN THE PARTS LIST ARE CRITICAL TO SAFE OPERATION. REPLACE THESE COMPONENTS WITH SONY PARTS WHOSE PART NUMBERS APPEAR AS SHOWN IN THIS MANUAL OR IN SUPPLEMENTS PUBLISHED BY SONY.

SAFETY CHECK-OUT

After correcting the original service problem, perform the following safety check before releasing the set to the customer:
Check the antenna terminals, metal trim, "metallized" knobs, screws, and all other exposed metal parts for AC leakage. Check leakage as described below.

LEAKAGE TEST

The AC leakage from any exposed metal part to earth ground and from all exposed metal parts to any exposed metal part having a return to chassis, must not exceed 0.5 mA (500 microampers). Leakage current can be measured by any one of three methods.

1. A commercial leakage tester, such as the Simpson 229 or RCA WT-540A. Follow the manufacturers' instructions to use these instruments.
2. A battery-operated AC milliammeter. The Data Precision 245 digital multimeter is suitable for this job.
3. Measuring the voltage drop across a resistor by means of a VOM or battery-operated AC voltmeter. The "limit" indication is 0.75 V, so analog meters must have an accurate low-voltage scale. The Simpson 250 and Sanwa SH-63Trd are examples of a passive VOM that is suitable. Nearly all battery operated digital multimeters that have a 2 V AC range are suitable. (See Fig. A)

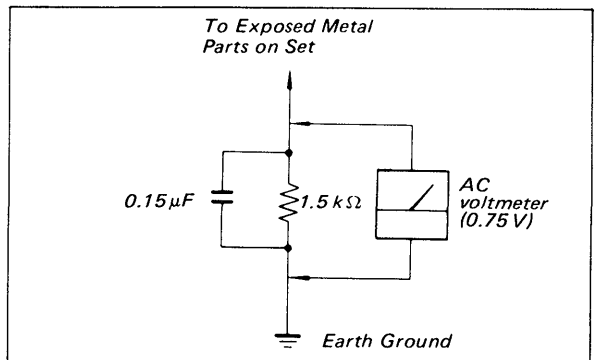

Fig. A. Using an AC voltmeter to check AC leakage.

ATTENTION AU COMPOSANT AYANT RAPPORT À LA SÉCURITÉ!

LES COMPOSANTS IDENTIFIÉS PAR UNE MARQUE ⚠ SUR LES DIAGRAMMES SCHÉMATIQUES ET LA LISTE DES PIÈCES SONT CRITIQUES POUR LA SÉCURITÉ DE FONCTIONNEMENT. NE REMPLACER CES COMPOSANTS QUE PAR DES PIÈCES SONY DONT LES NUMÉROS SONT DONNÉS DANS CE MANUEL OU DANS LES SUPPLÉMENTS PUBLIÉS PAR SONY.

SERVICING NOTES

NOTES ON HANDLING THE OPTICAL PICK-UP BLOCK OR BASE UNIT

The laser diode in the optical pick-up block may suffer electrostatic breakdown because of the potential difference generated by the charged electrostatic load, etc. on clothing and the human body.
During repair, pay attention to electrostatic breakdown and also use the procedure in the printed matter which is included in the repair parts.
The flexible board is easily damaged and should be handled with care.

NOTES ON LASER DIODE EMISSION CHECK

The laser beam on this model is concentrated so as to be focused on the disc reflective surface by the objective lens in the optical pick-up block. Therefore, when checking the laser diode emission, observe more than 25 cm away from the objective lens.

LASER DIODE AND FOCUS SEARCH OPERATION CHECK

1. Turn POWER switch on with no disc inserted and make Function switch to CD position.
2. Open the lid for CD.
3. Turn on S801 as following figure.
4. Press ▶ key.
5. Confirm the laser diode emission while observing the objecting lens. When there is no emission, Auto Power Control circuit or Optical Pick-up is broken.
   Objective lens moves up and down three times for the focus search.

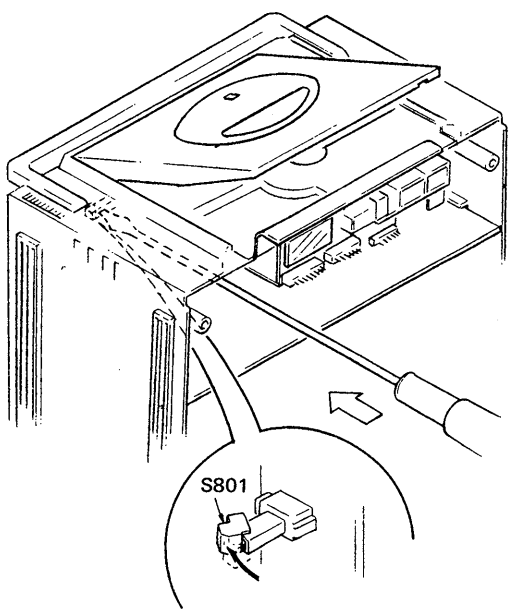

CHUCK PLATE JIG ON REPAIRING

On repairing CD section, playing a disc without the CD lid, use Chuck Plate Jig.

- Code number of Chuck Plate Jig: X-4918-255-1

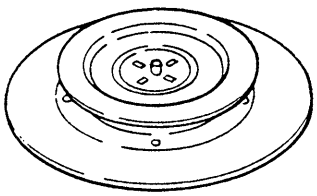

NOTE ON REPAIRING

The spindle motor (M702) and the turntable assembly are individually supplied as repair parts.
When repairing M702, please order the turntable assembly together.
Dimension is as follows.

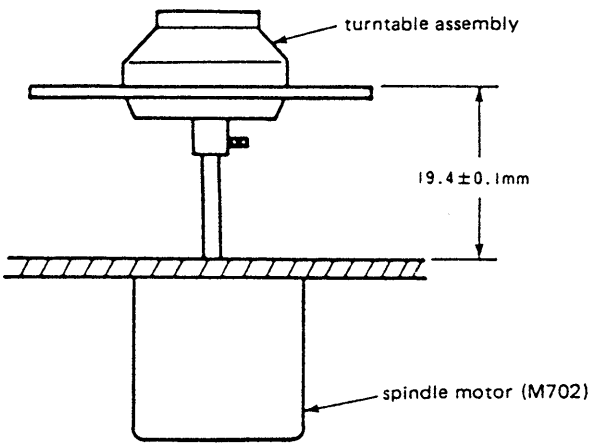

Parts Identification

General

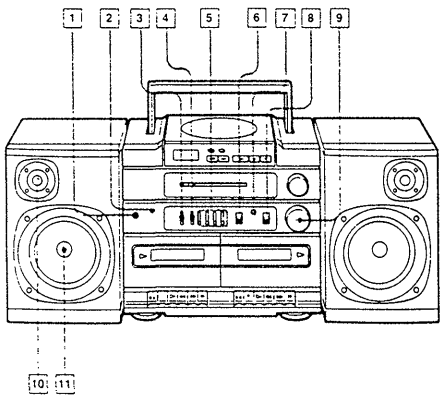

1 PHONES (headphones) jack (stereo minijack)
2 OPR/BAT (operation/battery) indicator
3 BALANCE control
4 BASS BOOST control (for listening only)
5 GRAPHIC EQUALIZER controls (for listening only)
6 FUNCTION selector
CD: For listening to/recording CD sound.
RADIO: For listening to/recording radio programs.
DUBBING: For tape dubbing.
TAPE (CD RADIO OFF): For listening to tapes. (For turning off the CD player or the radio.)
7 FM ST (FM stereo) indicator
8 BAND selector
FM: For listening to/recording FM radio programs.
AM: For listening to/recording AM radio programs.
9 VOLUME control
10 Tweeter
11 Woofer

CD player section

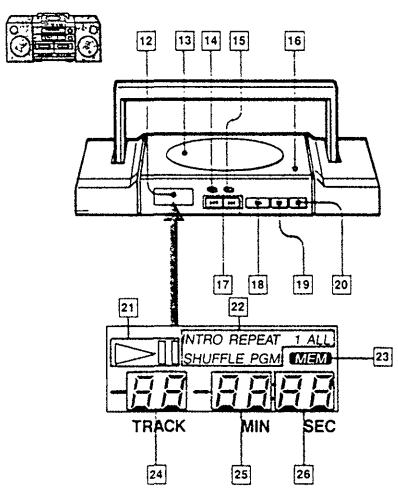

12 Display window
13 Disc cover
14 PLAY MODE button
INTRO: To scan all the selections
REPEAT 1: To repeat one of the selections
REPEAT ALL: To repeat all the selections
REPEAT SHUFFLE: To play the selections repeatedly in a random order.
REPEAT PGM: To play the selections repeatedly in the desired order.
PGM: To play the selections in the desired order.
15 REMAIN/ENTER button
16 PUSH OPEN/CLOSE button
17 ⏮ ⏭ AMS/SEARCH buttons
18 ▶ PLAY button
19 ❚❚ PAUSE button
20 ■ STOP button

CD display window

21 Pause/play indication
22 Play mode indication
23 MEM (memory) indication
24 TRACK indication
25 MIN (minute) indication
26 SEC (second) indication

Tuner section

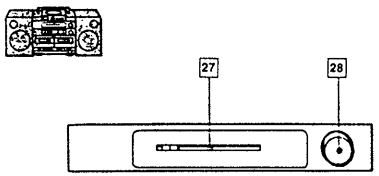

27 Dial scale and pointer
28 TUNING control

Tape recorder section

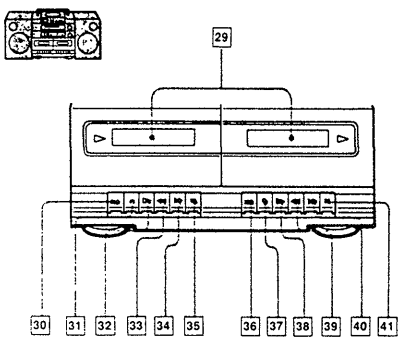

29 Cassette holders

(Deck A)
30 ■⏏ (stop/eject) button
31 HI (high) SPEED DUBBING button
32 ▷ (play) button
33 ◀◀ (rewind) button
34 ▶▶ (fast forward) button
35 ❚❚ (pause) button

(Deck B)
36 ■⏏ (stop/eject) button
37 ● (record) button
38 ▷ (play) button
39 ◀◀ (rewind) button
40 ▶▶ (fast forward) button
41 ❚❚ (pause) button

Rear panel

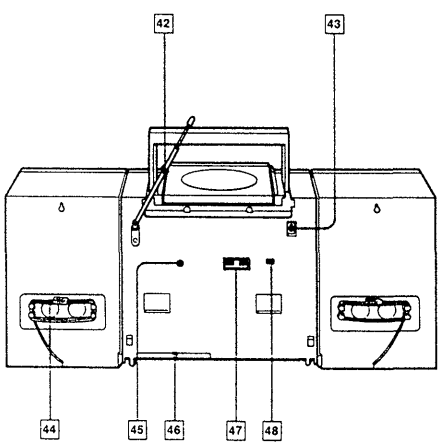

42 Telescopic antenna
43 AC IN (AC power input) socket
44 Speaker cord
45 MIX MIC (mixing microphone) jack (minijack)
46 Battery compartment (bottom)
47 SPEAKER terminals
48 ISS (interference suppress switch)

SECTION 1
GENERAL

This section is extracted from instruction manual.

SECTION 2
DISASSEMBLY

Note : Follow the disassembly procedure in the numerical order given.

2-1. FRONT CABINET ASSY

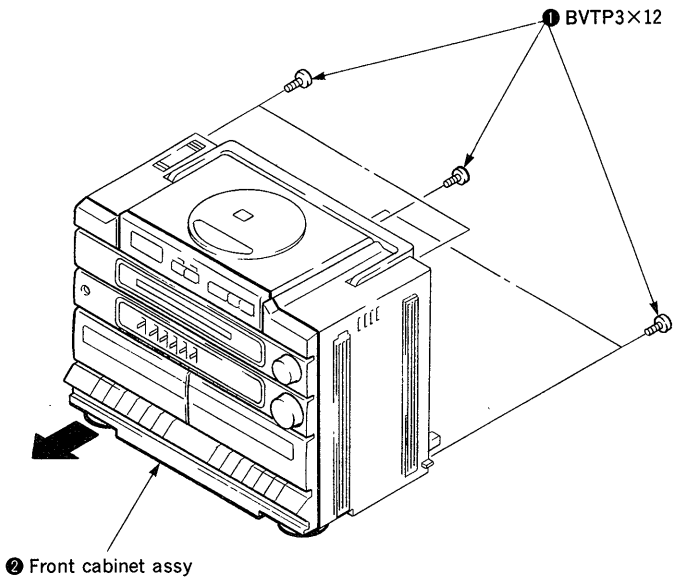

2-2. HANDLE

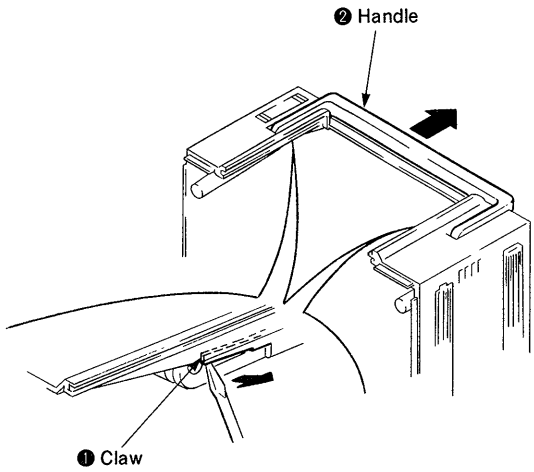

2-3. POINTER SETTING

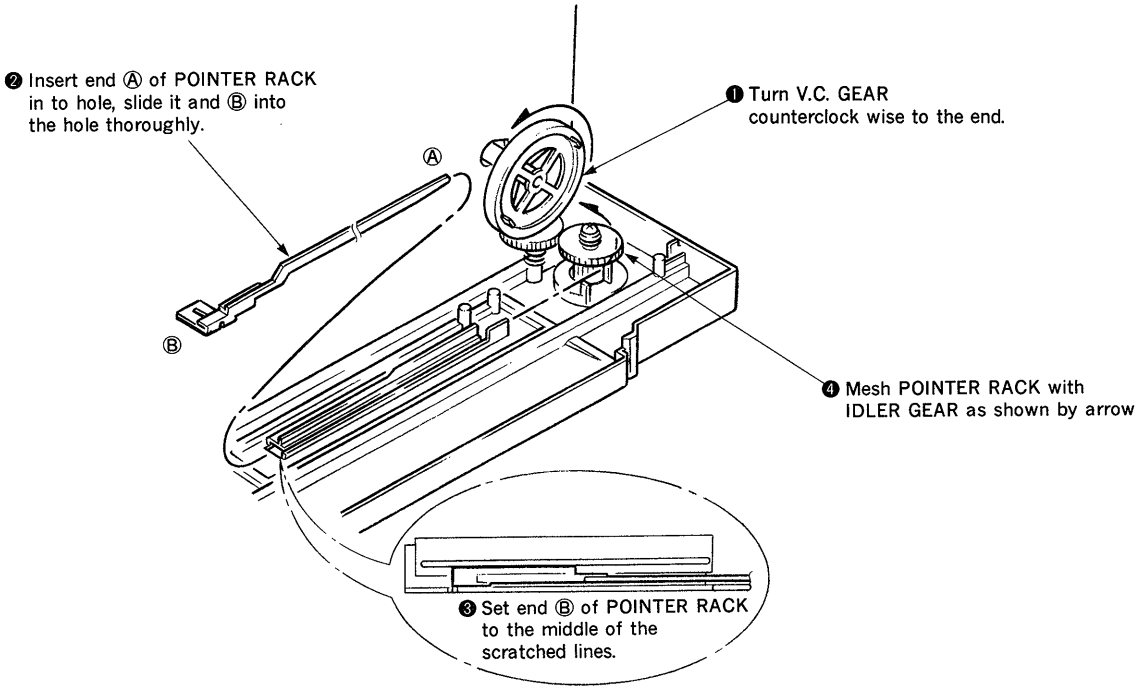

SECTION 3
MECHANICAL ADJUSTMENTS

PRECAUTION

1. Clean the following parts with a denatured-alcohol-moistened swab:
   record/playback head — pinch roller
   erase head — rubber belts
   capstan — idlers
2. Demagnetize the record/playback head with a head demagnetizer. (Do not bring the head demagnetizer close to the erase head.)
3. Do not use a magnetized screwdriver for the adjustments.
4. After the adjustments, apply suitable locking compound to the parts adjusted.
5. The adjustments should be perfomed with the rated power supply voltage unless otherwise noted.
6. Power supply voltage: 12V dc.

Torque Measurement

Torque	Torque meter	Meter reading
Forward	CQ-102C	20−60g•cm (0.28−0.83 oz•inch)
Forward back tension	CQ-102C	2−6g•cm (0.028−0.083 oz•inch)
Reverse	CQ-102RC	20−60g•cm (0.28−0.83 oz•inch)
Reverse back tension	CQ-102RC	2−6g•cm (0.028−0.083 oz•inch)
Fast Forward	CQ-201B	more than 45g•cm (more than 0.62 oz•inch)
Rewind	CQ-201B	more than 45g•cm (more than 0.62 oz•inch)

Tape Tension Measurement

Mode	Meter	Meter Reading
Forward	CQ-403A	more than 70g (more than 2.47 oz)
Reverse	CQ-403R	

SECTION 4
ELECTRICAL ADJUSTMENTS

4-1. TAPE RECORDER SECTION

Standard Input Level

	MIC IN
Source impedance	300 Ω
input level	2.451 mV (−50dB)

Standard Output Level

Output terminal	SP OUT	PHONES OUT
load impedance	3.2Ω	32Ω
output signal level	0.775V (0dB)	0.25V (−10dB)

Test Tape

Type	Signal	Used for
WS-48A	3kHz, 0dB	tape speed adjustment

Tape Speed Adjustment DECK A DECK B

Procedure:

- Perform high speed adjustment before normal speed adjustment.

Mode: playback

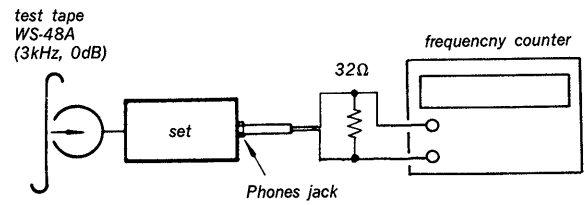

Speed	S402 (CNP312)	Deck	Adjustment point	Frequency counter
High	ON	A	RV304	5,980−6,020Hz
		B	confirm	
Normal	OFF	A	RV303	2,990−3,010Hz
		B	confirm	

Frequency difference between the begining and the end of the tape should be within ±0.35%.

Adjustment Location:

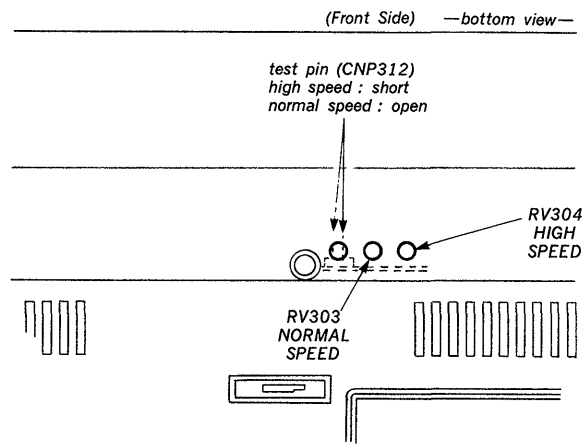

4-2. RADIO SECTION

• FM Section

Setting :

BAND switch : FM

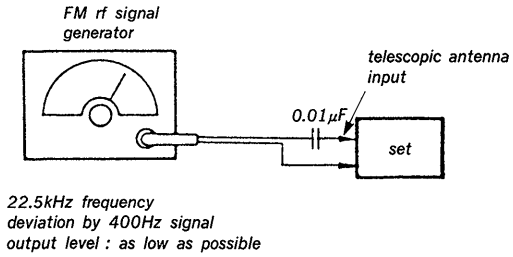

• AM Section

Setting :

BAND switch : AM

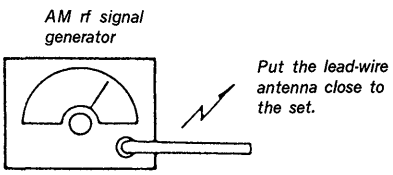

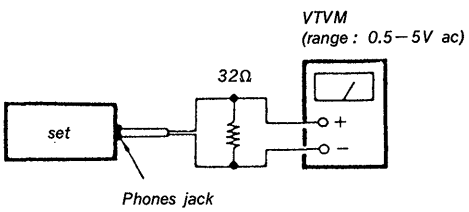

• Repeat the procedures in each adjustment several times, and the frequency coverage and tracking adjustments should be finally done by the trimmer capacitors.

FM FREQUENCY COVERAGE ADJUSTMENT	
Adjust for a maximum reading on VTVM.	
L2	CT2
86.5MHz	109.5MHz

FM TRACKING ADJUSTMENT	
Adjust for a maximum reading on VTVM.	
L1	CT1
86.5MHz	109.5MHz

AM FREQUENCY COVERAGE ADJUSTMENT	
Adjust for a maximum reading on VTVM.	
T1	CT4
516kHz	1,760kHz

AM TRACKING ADJUSTMENT	
Adjust for a maximum reading on VTVM.	
L3	CT3
620kHz	1,400kHz

AM IF ADJUSTMENT
Adjust for a maximum reading on VTVM.
CP1
455kHz

Adjustment Location : Audio Main board

AUDIO MAIN BOARD —Component side—

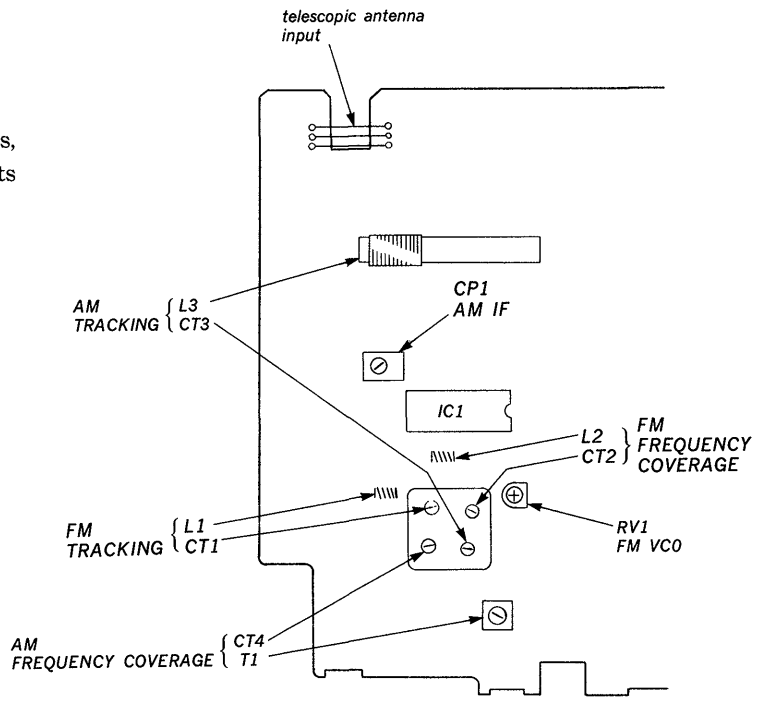

FM VCO ADJUSTMENT

Setting :

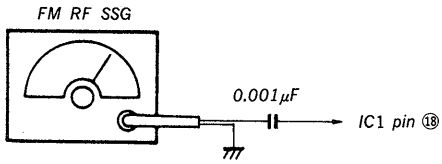

Modulation : no modulation
Output level : 0.1V (100dB)

CarrierFrequency : According to the color of the mark on ceramic (CF2)

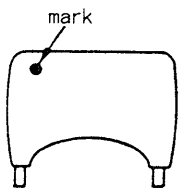

Mark	Carrier Frequency
red	10.7 MHz
blue	10.67 MHz
orange	10.73 MHz
black	10.64 MHz
white	10.76 MHz

Procedure :

1. Adjust RV1 so that the reading on the frequency counter becomes in 76.0kHz ±0.3kHz.

Adjustment Location : Audio Main Board (See page 7)

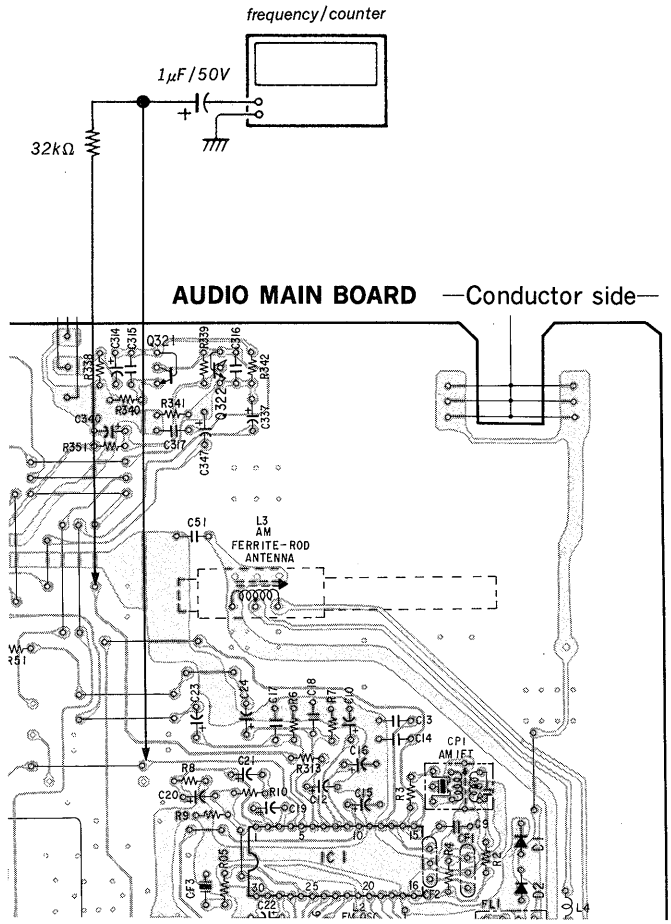

4-3. CD SECTION

Notes on Adjustment

1. Perform adjustment in service mode.
   After adjustment, be sure to release service mode.
2. Perform adjustments in the order given.
3. Use the disc (YEDS-18, Part No. 3-702-101-01) only when so indicated.

Before Adjustment

Put the set into service mode and perform the following checks. Repair if there are any problems.

• Sled Motor Check

1. Press ▶ key, then press ■ key.
2. Press ▶▶I, I◀◀ keys and confirm that the FOP moves smoothly from the innermost to outermost circumference and back smoothly and with no catching or abnormal noises.
   ▶▶I : FOP moves to the outer circumference
   I◀◀ : FOP moves to the inner circumference

• Focus Search Check

1. Press ▶ key. (Focus search operation is performed continuously.)
2. Look at the FOP objective lens and confirm the it moves up and down smoothly, with no catching or abnormal noises.
3. Press' ■ key.
   Confirm that focus search operation stops. If it does not, press ■ key again longer.

How to Put the Set into Service Mode

1. Solder-bridge the following portion on the CD main board.
2. Turn the power on.

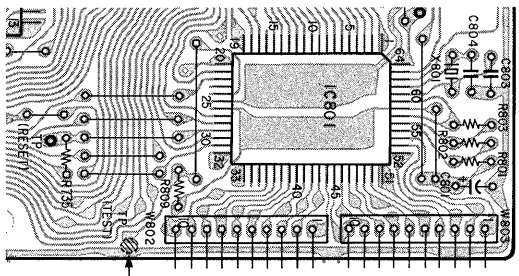

VCO Adjustment

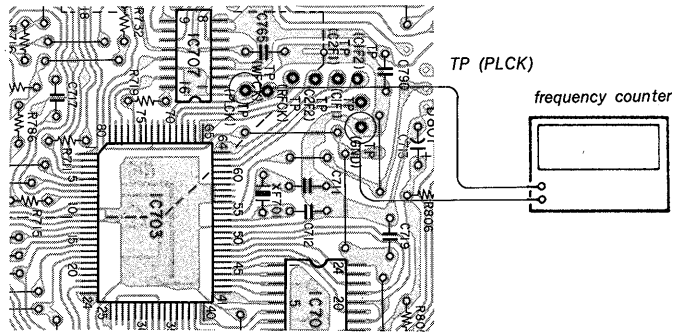

Adjustment Procedure :

1. Make a solder bridge at portion Ⓐ on CD main board.
2. Adjust RV703 so that the reading on the frequency counter becomes 4.3218MHz.
3. Remove the solder-bridge at Ⓐ potion.

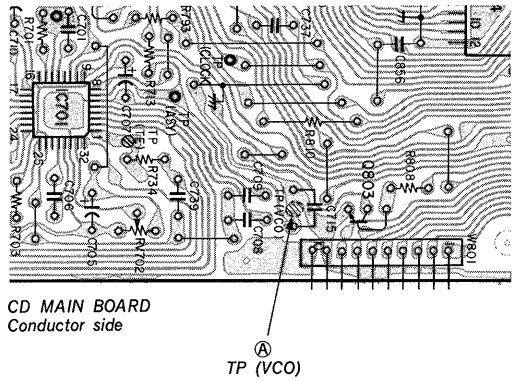

• See page 12 for Adjustment Location.

Traverse Adjustment

This adjustment is to be done when the optical block is replaced.

Adjustment Procedure :

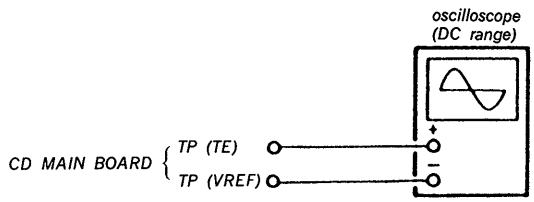

1. Connect the oscilloscope between TP (TE) and TP (VREF.)
2. Put the set into service mode.
3. Press the ▶▶| and |◀◀ keys to move the FOP to the center.
4. Insert disc (YEDS-18) and press ▶ key.
5. Adjust RV701 so that the oscilloscope traverse waveform is symmetrical, as shown in the figure below.
6. Release service mode after adjustment is completed.

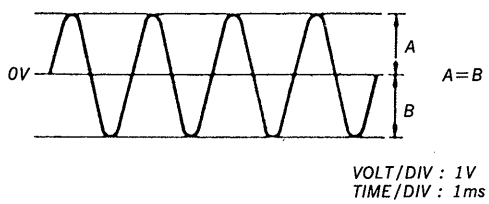

Adjustment value : 2±0.5Vp-p

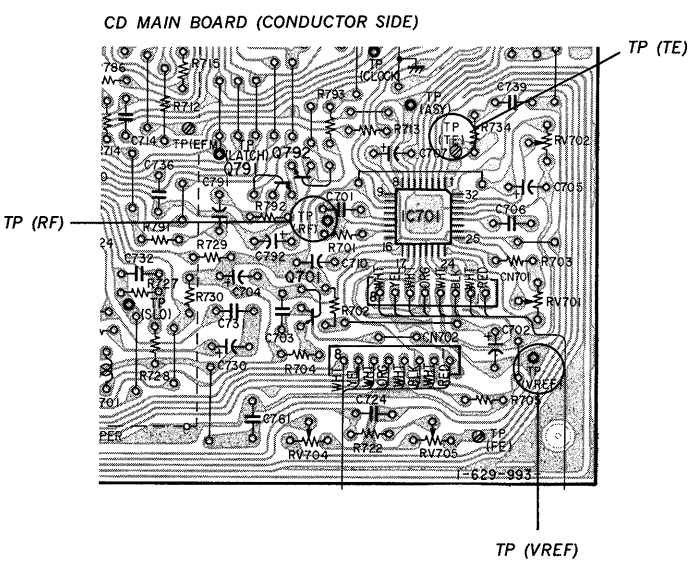

Focus Bias Adjustment

This adjustment is to be done when the optical block is replaced.

Adjustment Procedure :

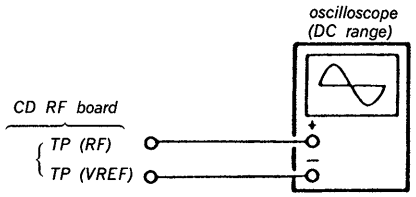

1. Connect the oscilloscope between TP (RF) and TP (VREF).
2. Put the set into service mode.
3. Press the ▶▶| and |◀◀ keys to move the FOP to the center. (Move the FOP to the music area on the disc to enable easy visibility of the eye pattern.)
4. Insert disc (YEDS-18) and press ▶ key.
5. Adjust RV702 so that the oscilloscope waveform is as shown in the figure below (eye pattern).
   A good eye pattern means that the diamond scape (◇) in the center of the waveform can be clearly distinguished.
6. Release service mode after adjustment is completed.

• RF signal reference waveform (eye pattern).

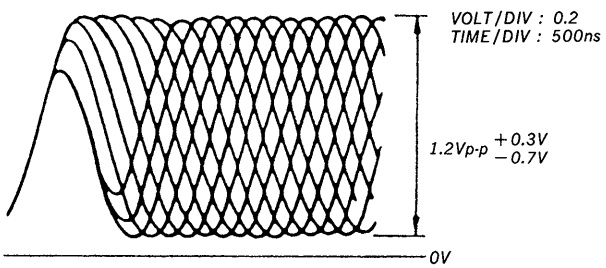

When observing the eye pattern, set the oscilloscope for AC range and raise vertical sensitivity.

• See page 12 for Adjustment Location.

REFERENCE

Focus/Tracking Gain Adjustment

A frequency response analyzer is necessary in order to perform this adjustment exactly.

However, this gain has a margin, so even if it is slightly off, there is no problem. Therefore, do not perform this adjustment.

Focus/tracking gain determines the pick-up follow-up (vertical and horizontal) relative to mechanical noise and mechanical shock when the 2-axis device operate.

However, as these reciprocate, the adjustment is at the point where both are satisfied.

- When gain is raised, the noise when the 2-axis device operates increases.
- When gain is lowered, it is more susceptible to mechanical shock and skipping occurs more easily.
- When gain adjustment is off, the symptoms below appear.

Gain / Symptoms	Focus	Tracking
• The time until music starts becomes longer for STOP →▶ PLAY on automatic selection (⏮, ⏭ buttons pressed. (Normally takes about 2 seconds.)	low	low or high
• Music docs not start and disc continues to rotate for STOP → ▶ PLAY or automatic selection (⏮, ⏭ buttons pressed.)	—	low
• Sound is interrupted during PLAY. Or time counter display stops progressing	—	low
• More poise during 2-axis device operation.	high	high

The following is a simple adjustment method.

—Simple Adjustment—

Note : Since exact adjustmeunt cannot be performed, remember the positions of the controls before performing the adjustment. If the positions after the simple adjustment are only a little different, return the controls to the original position.

Procedurd :

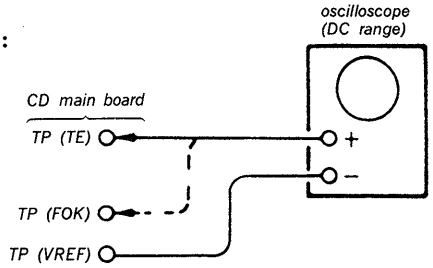

1. Keep the set horizontal.
   If the set not horizontal, this adjustment cannot be performed due to the gravity against the 2 axis device.
2. Insert disc (YEDS-18) and press ▶ PLAY button.
3. Connect oscilloscope to CD main board TP (FOK).
4. Adjustment RV705 so that the waveform is as shown in the figure below. (focus gain adjustment)

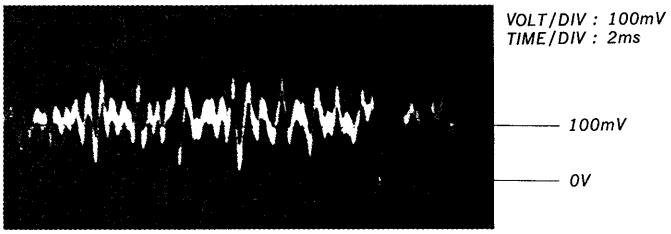

- Incorrent Examples (DC level changes more than on adjusted waveform)

low focus gain

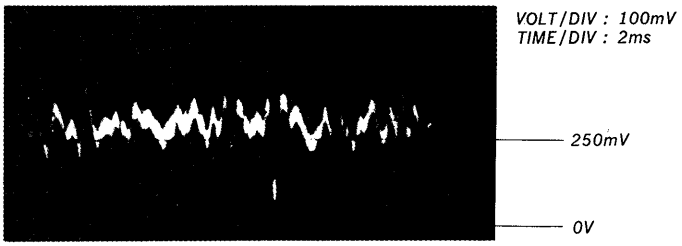

high focus gain

5. Connect oscilloscope to TP (TE).
6. Adjust RV704 so that the waveform is as shown in the figure below. (Tracking gain adjustment)

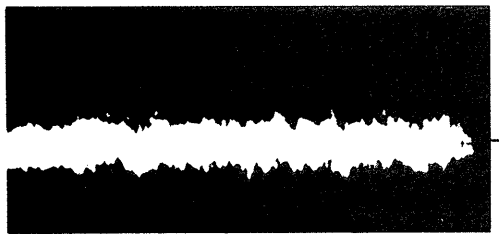

● Incorrect Examples (fundamental wave appears)

low tracking gain

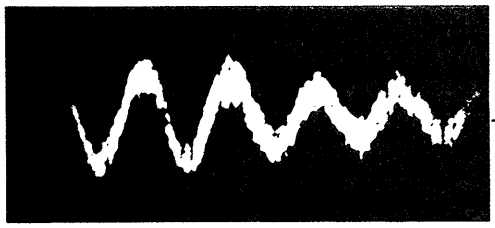

high tracking gain
(higher fundamental wave than for low gain)

Adjustment Location :

CD MAIN BOARD

—Component side—

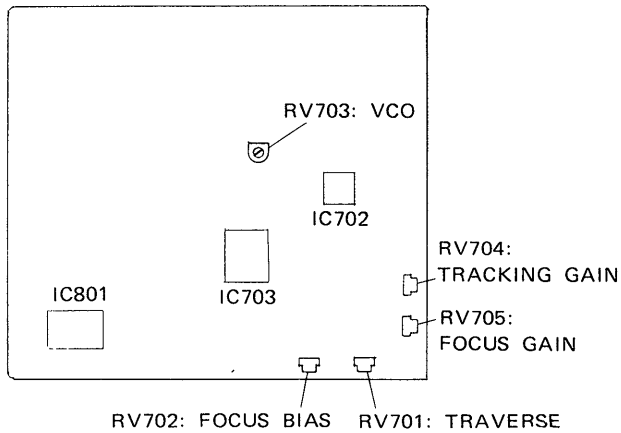

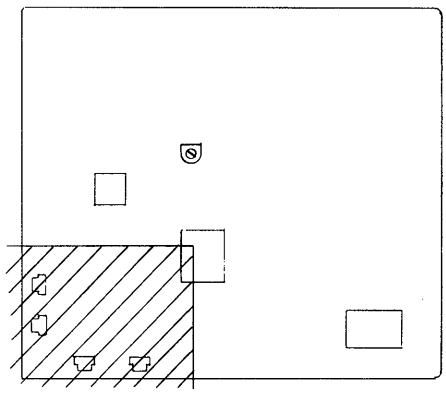

CD MAIN BOARD

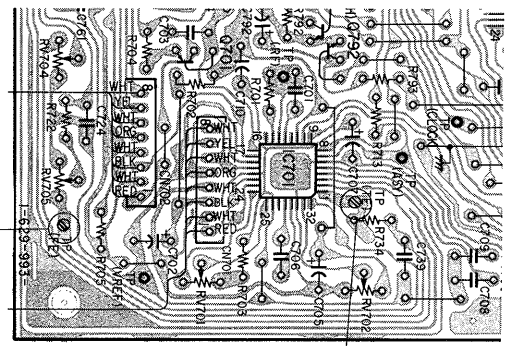

*Note : When a frequency response analyzer is used :

*
Remove the solder bridge while adjustment of focus gain.
(After adjustment make the solder bridge)

*
Remove the solder bridge while adjustment of tracking gain.
(After adjustment make the solder bridge)

SECTION 5
DIAGRAMS

5-1. CIRCUIT BOARDS LOCATION

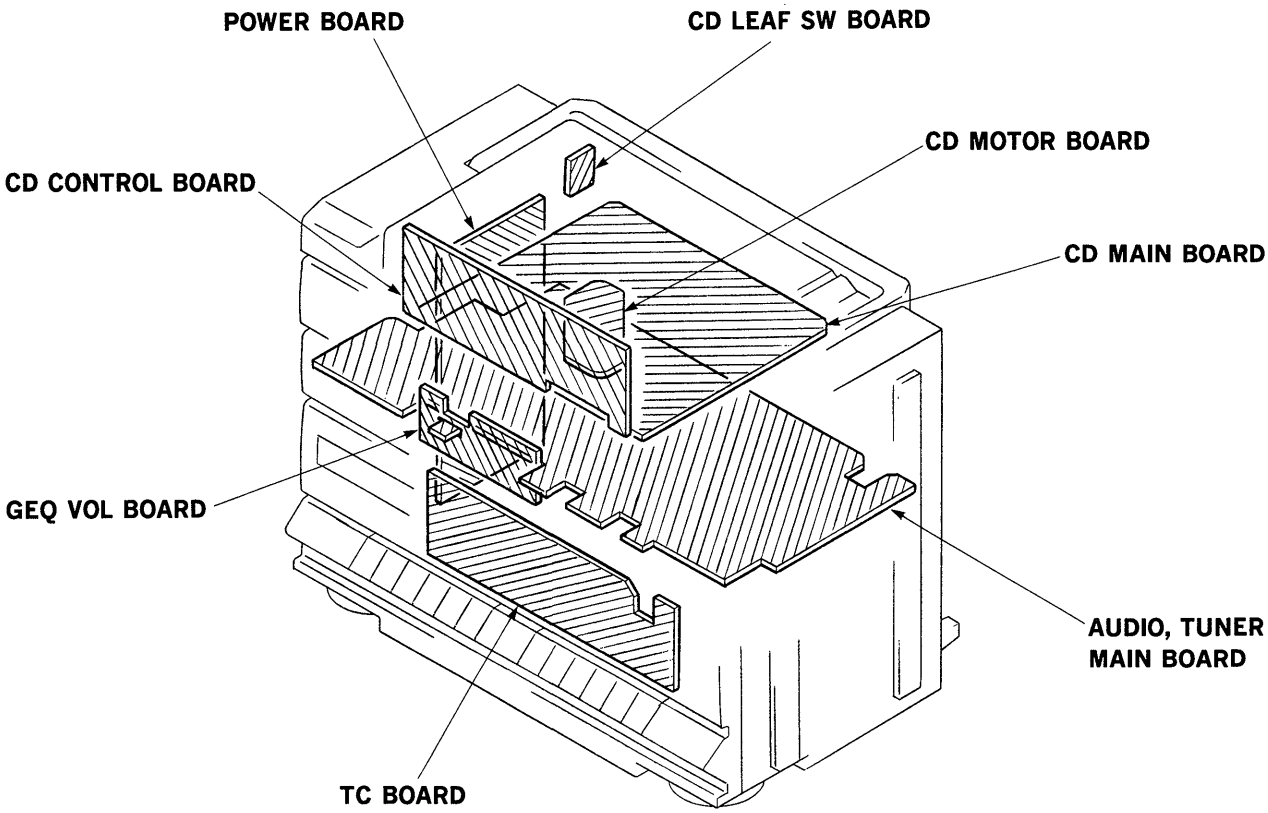

5-2. SEMICONDUCTOR LEAD LAYOUT

BA6294

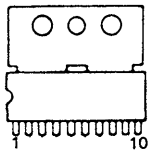

MARKING SIDE VIEW

CXD1130Q

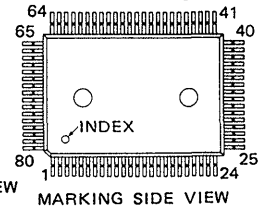

MARKING SIDE VIEW

PST5290D

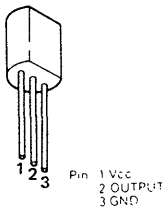

2SD1815-K

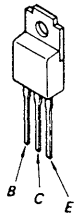

CXA1081Q

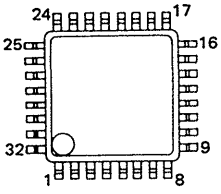

MARKING SIDE VIEW

CXP5024-092Q

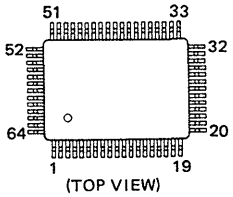

(TOP VIEW)

TA8189N

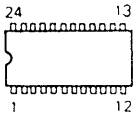

(TOP VIEW)

2SD1944-K

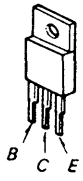

CXA1182Q-Z

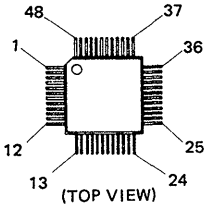

(TOP VIEW)

LA4597

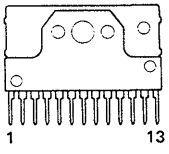

μPD6376GS

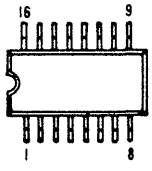

(TOP VIEW)

2SK105A-30

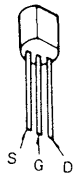

CXA1238S

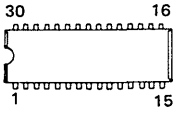

(TOP VIEW)

LH5116AN-10

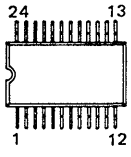

(TOP VIEW)

KSC1008-R
KSR1003
KSR1006
KSR1008
KSR1009
KSR2003
2SB1013-4

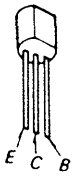

MTZN-10B
RD6.2ES-B2
RD6.8ES-B2
1SS119

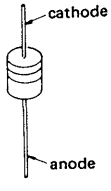

CXA1352S

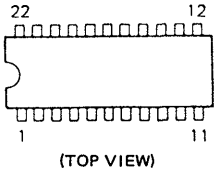

(TOP VIEW)

MC4558-C
NJM2100D

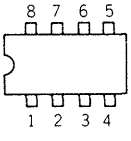

(TOP VIEW)

2SC2785-HFE

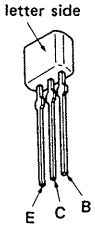

SEL2210R-D

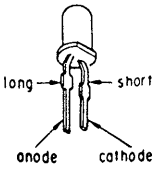

5-3. BLOCK DIAGRAM

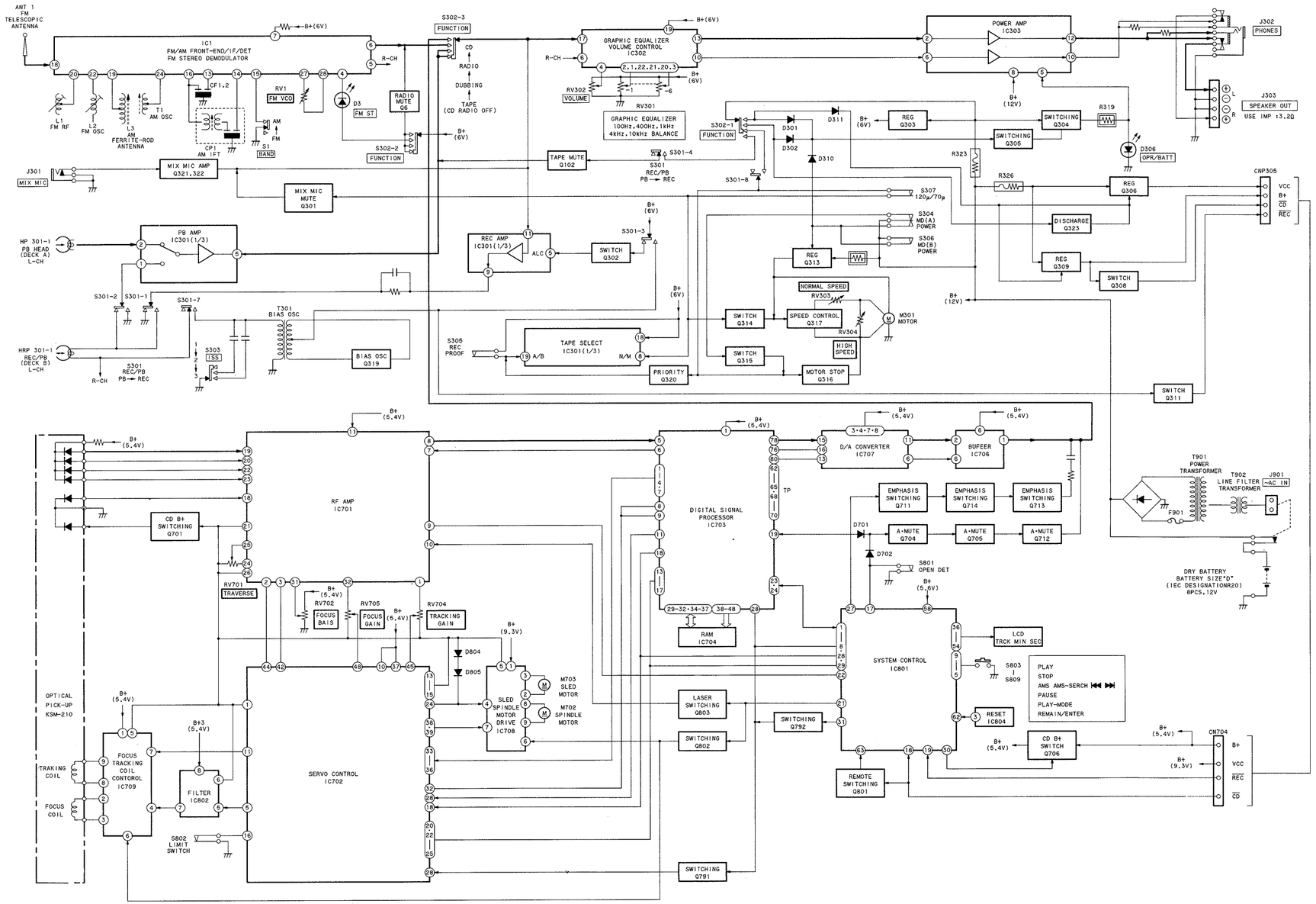

5-4. PRINTED WIRING BOARD —TUNER, AUDIO Section—

• Refer to page 14 for Semiconductor Lead Layouts.

• Semiconductor Location

Ref. No.	Location
D1	E-16
D2	E-16
D3	H-13
D301	G-13
D302	G-12
D303	G-12
D304	E-8
D305	E-8
D306	H-6
D307	C-9
D308	C-9
D309	C-10
D310	E-9
D311	F-12
D312	F-8
D313	E-8
D901	E-3
IC1	E-15
IC301	D-11
IC302	F-9
IC303	F-7
Q5	G-13
Q6	G-12
Q102	F-11
Q202	F-11
Q301	B-13
Q302	E-10
Q303	E-8
Q304	F-8
Q305	F-8
Q306	C-10
Q308	B-11
Q309	C-9
Q311	B-11
Q313	C-9
Q314	I-18
Q315	I-17
Q316	I-17
Q317	I-17
Q319	C-7
Q320	E-10
Q321	B-14
Q322	B-14
Q323	C-10

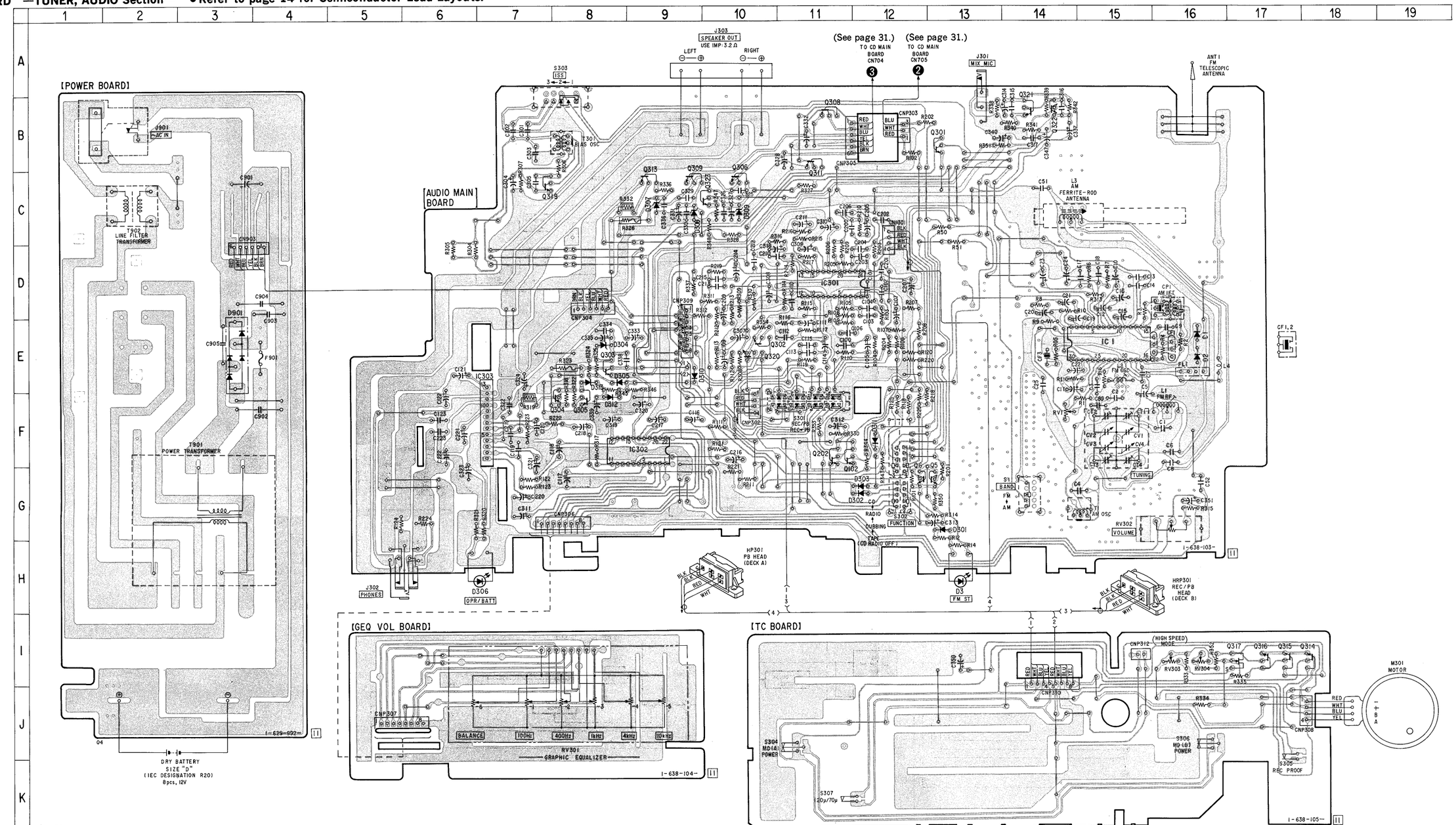

Note:
- ○—— : parts extracted from the component side.
- ⊡ indicates side identified with part number.

5-5. SCHEMATIC DIAGRAM —TUNER Section—

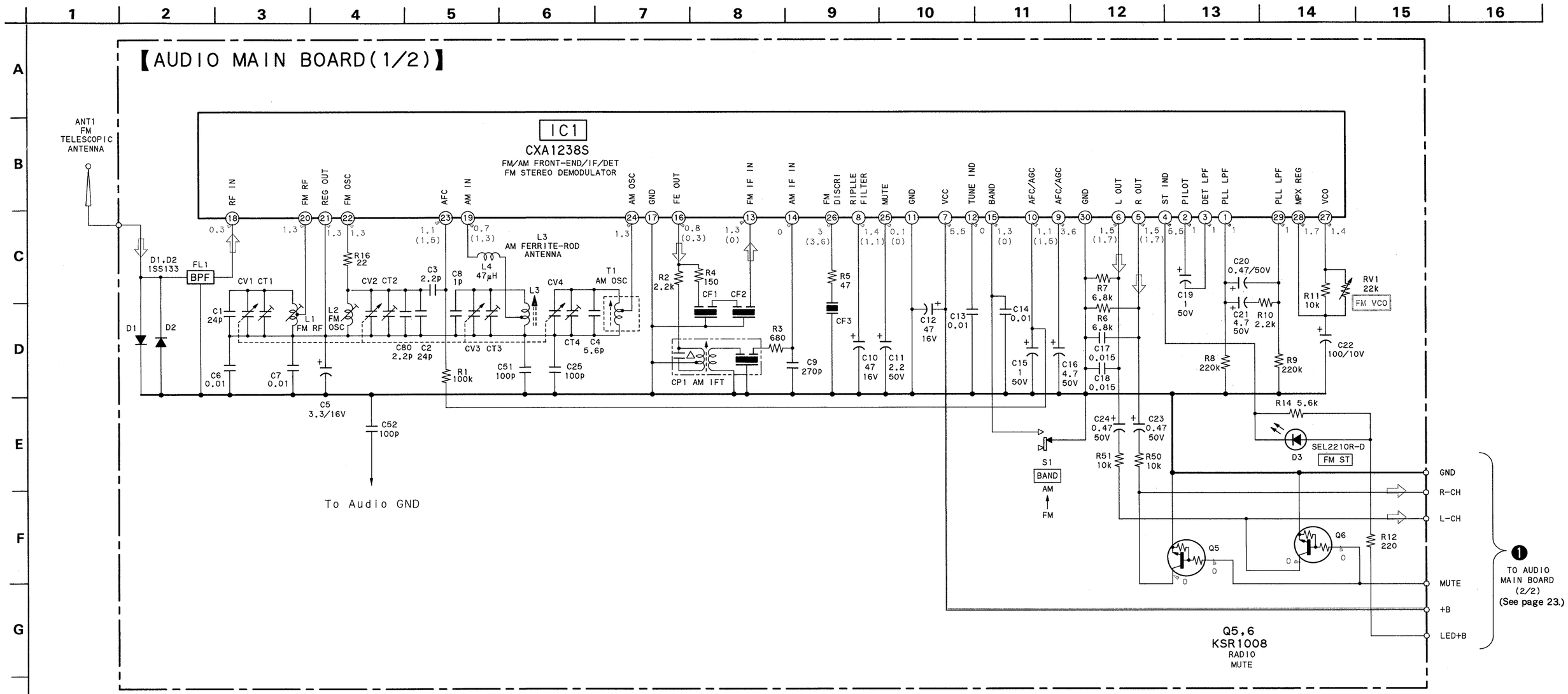

Note:

- All capacitors are in μF unless otherwise noted. pF: μμF 50WV or less are not indicated except for electrolytics and tantalums.
- All resistors are in Ω and 1/4W or less unless otherwise specified.

- ▭ : B+ Line
- ▭ : adjustment for repair.
- Power voltage is dc12V and fed with regulated dc power supply from battery terminal.
- Voltage and waveforms are dc with respect to ground under no-signal (detuned) conditions.
  no mark : FM
  ( ) : AM
- Voltages are taken with a VOM (Input Impedance 10MΩ). Voltage variations may be noted due to normal production tolerances.
- **Signal path.**
  ⇨ : FM

• IC Block Diagram —Tuner Section—

IC1 CXA1238S

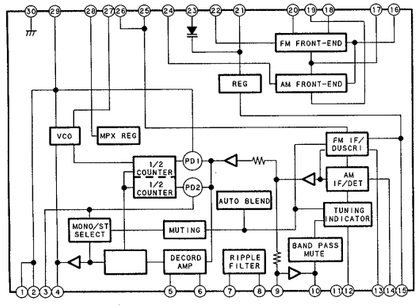

5-6. SCHEMATIC DIAGRAM —AUDIO Section—

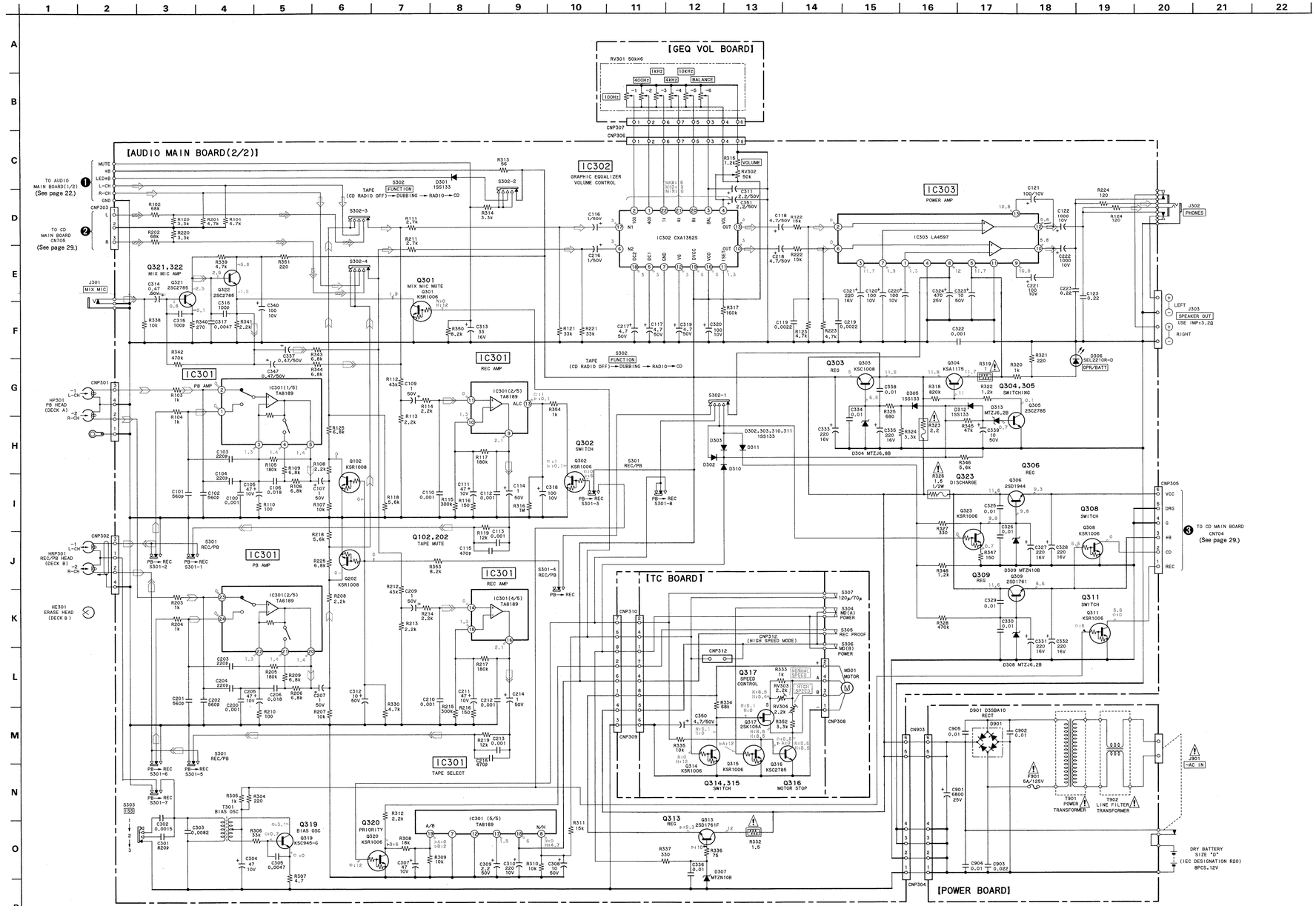

Note:

- All capacitors are in μF unless otherwise noted. pF: μμF 50WV or less are not indicated except for electrolytics and tantalums.
- All resistors are in Ω and ¼W or less unless otherwise specified.
- △ : internal component.
- ⚠ : nonflammable resistor.
- ⚠ : fusible resistor.

Note:	Note:
The components identified by mark ⚠ or dotted line with mark ⚠ are critical for safety. Replace only with part number specified.	Les composants identifiés par une marque ⚠ sont critiques pour la sécurité. Ne les remplacer que par une pièce portant le numéro spécifié.

- ▭ : B+ Line
- ▭ : adjustment for repair.
- Power voltage is dc12V and fed with regulated dc power supply from battery terminal.
- Voltage and waveforms are dc with respect to ground under no-signal conditions.
  no mark : PLAY
  ▷A : PLAY (DECK A)
  ▷B : PLAY (DECK B)
  ◎ : REC
  N : NORMAL SPEED
  H : HIGH SPEED
- Signal path.
  ⇨ : FM
  ⊳ : PB (DECK A)
  ▭ : PB (DECK B)
  ▭ : REC (DECK B)
  ⇨ : CD

• IC Block Diagram —Audio Section—

IC301 TA8189

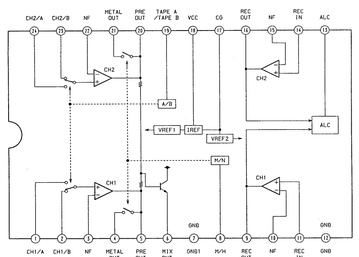

IC302 CXA1352S

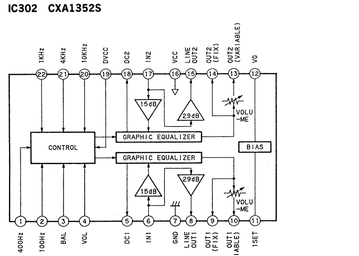

IC303 LA4597

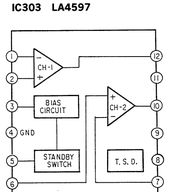

• IC Block Diagram —CD Section—

IC701 CXA1081Q

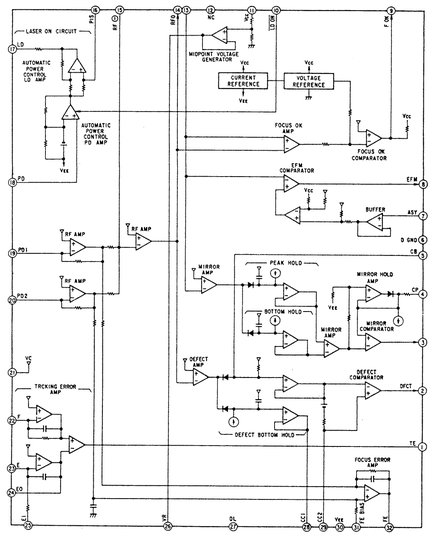

IC703 CXD1130Q

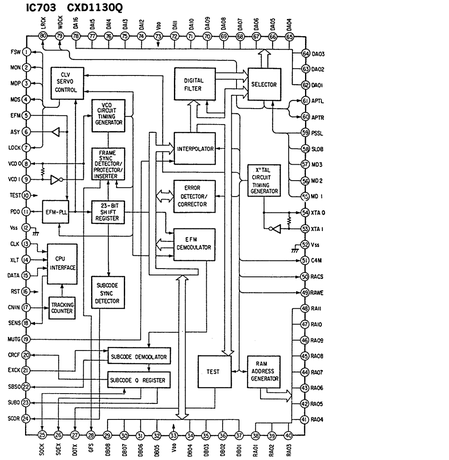

IC708,709 BA6294

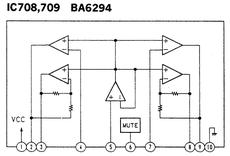

5-7. SCHEMATIC DIAGRAM —CD Section—

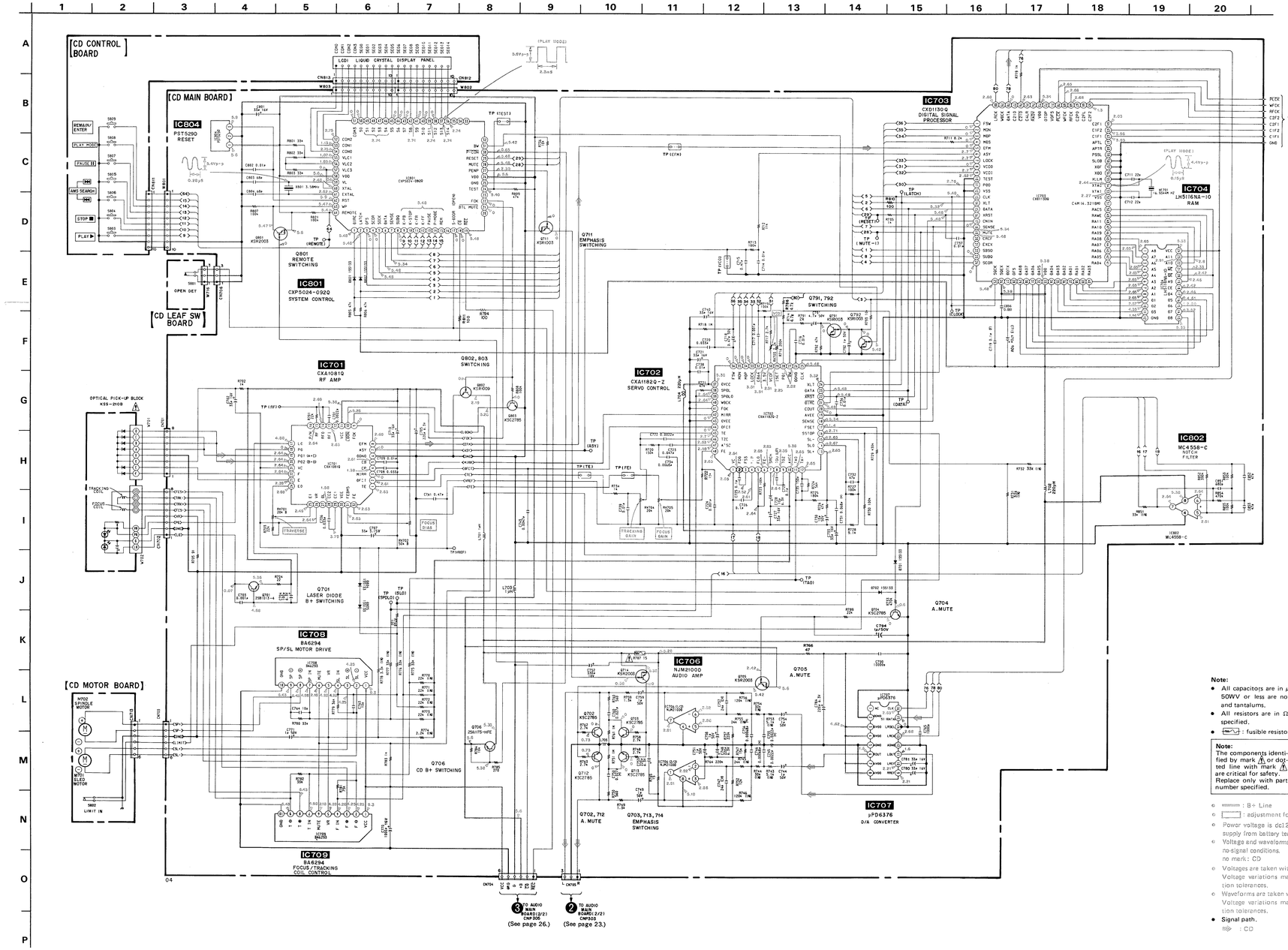

Note:

- All capacitors are in μF unless otherwise noted. pF: μμF 50WV or less are not indicated except for electrolytics and tantalums.
- All resistors are in Ω and ¼W or less unless otherwise specified.
- ▭ : fusible resistor.

Note:	Note:
The components identified by mark ⚠ or dotted line with mark ⚠ are critical for safety. Replace only with part number specified.	Les composants identifiés par une marque ⚠ sont critiques pour la sécurité. Ne les remplacer que par une pièce portant le numéro spécifié.

- ▬▬ : B+ Line
- ▭ : adjustment for repair.
- Power voltage is dc12V and fed with regulated dc power supply from battery terminal.
- Voltage and waveforms are dc with respect to ground under no-signal conditions.
  no mark : CD
- Voltages are taken with a VOM (Input impedance 10MΩ). Voltage variations may be noted due to normal production tolerances.
- Waveforms are taken with a oscilloscope. Voltage variations may be noted due to normal production tolerances.
- **Signal path.**
  ▶▶ : CD

5-8. PRINTED WIRING BOARD —CD Section— • Refer to page 14 for Semiconductor Lead Layouts.

• Semiconductor Location

Ref. No.	Location
D701	B-5
D702	B-5
D801	C-6
D802	C-6
D804	G-3
D805	F-3
IC701	F-7
IC702	F-5
IC703	D-6
IC704	D-7
IC706	C-4
IC707	D-5
IC708	E-3
IC709	E-3
IC801	B-7
IC802	G-3
IC803	F-13
IC804	A-6
Q701	F-7
Q702	D-3
Q703	D-3
Q704	B-6
Q705	D-3
Q706	D-3
Q711	A-5
Q712	C-3
Q713	C-3
Q714	D-4
Q791	F-6
Q792	F-7
Q801	A-6
Q802	B-6
Q803	D-8

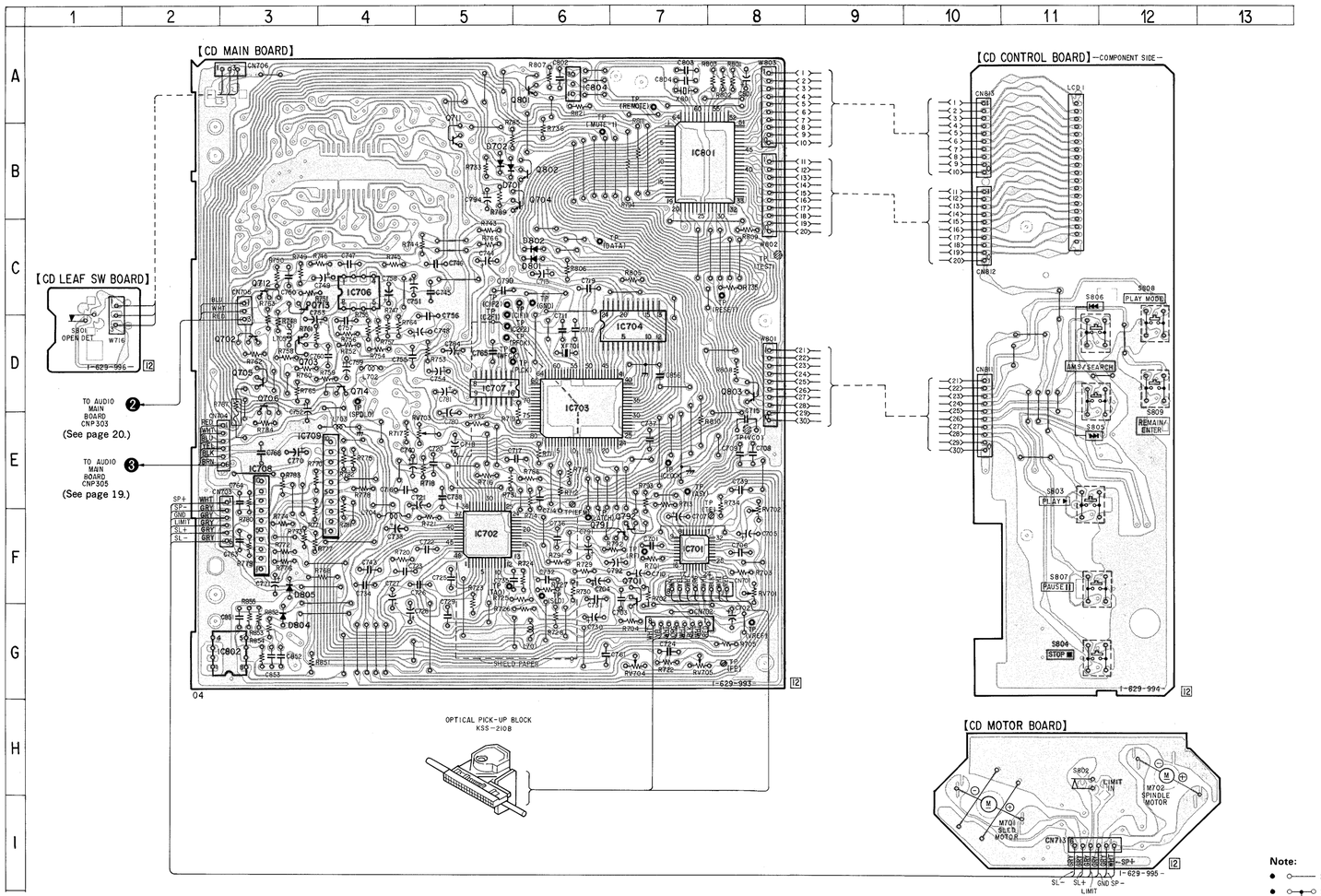

LCD 1

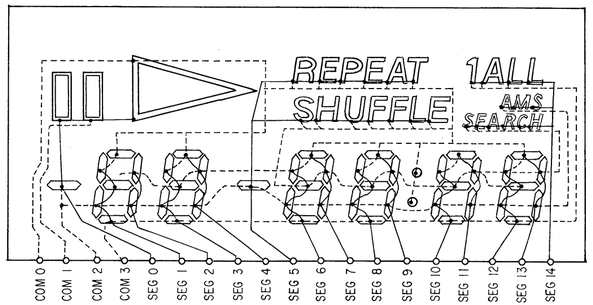

IC702 CXA1182Q-Z

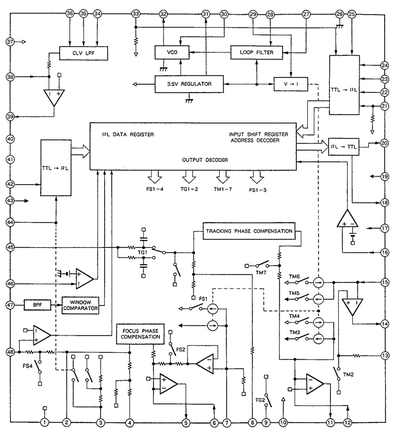

IC707 μPD6376GS

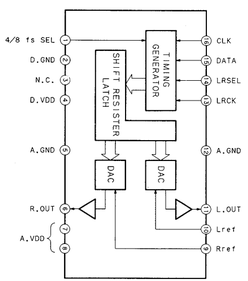

Note:
- ○—— : parts extracted from the component side.
- ○—●—○ : Jumper wire connected to the ground pattern on the component side.

SECTION 6
EXPLODED VIEWS

NOTE:

- The mechanical parts with no reference number in the exploded views are not supplied.
- The construction parts of an assembled part are indicated with a collation number in the remark column.
- Items marked "*" are not stocked since they are seldom required for routine service. Some delay should be anticipated when ordering these items.
- Due to standardization, parts with part number suffix -XX and -X may be different from the parts specified in the components used on the set.
- Color Indication of Appearance Parts Example:
  KNOB, BALANCE (WHITE) ... (RED)
  ↑ Parts' Color ↑ Cabinet's Color
- Screw(#mark) list is given in the last of this parts list.

The components identified by mark ⚠ or dotted line with mark ⚠ are critical for safety.
Replace only with part number specified.

Les composants identifiés par une marque ⚠ sont critiques pour la sécurité.
Ne les remplacer que par une pièce portant le numéro spécifé.

6-1. FRONT CABINET ASSEMBLY

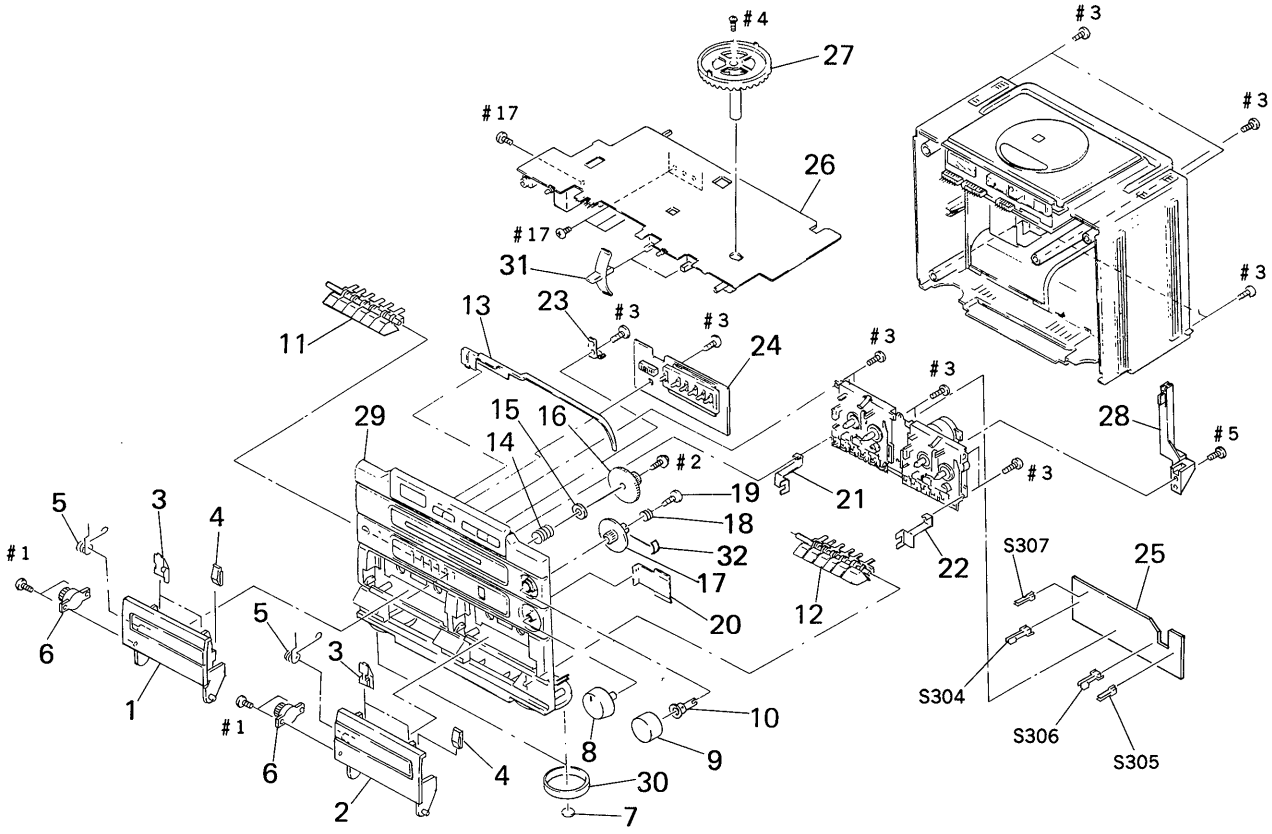

Ref.No	Part No.	Description	Remarks
1	X-3362-578-1	HOLDER SUB (A) ASSY, CASSETTE	
2	X-3362-579-1	HOLDER SUB (B) ASSY, CASSETTE	
3	4-930-233-01	SPRING	
4	*4-930-280-01	GUIDE (C)	
5	4-920-985-01	SPRING (H)	
6	3-343-248-01	DAMPER (P), SMALL	
7	4-930-231-01	FOOT	
8	4-920-976-01	KNOB (VOLUME)	
9	4-920-975-01	KNOB (TUNING)	
10	4-920-993-01	JOINT (B)	
11	X-3362-580-1	BUTTON (A) BLOCK ASSY, MD	
12	X-3362-581-1	BUTTON (B) BLOCK ASSY, MD	
13	4-930-209-01	RACK, POINTER	
14	4-930-283-01	SPRING, COMPRESSION	
15	4-930-282-01	WASHER (T), POLY-SLIDER	
16	4-920-977-01	GEAR, CONVERSION	
17	4-934-505-01	GEAR, IDLER	
18	4-920-979-01	SPRING	
19	4-930-277-01	SCREW (4.5X8),TAPPING,PAN HEAD	
20	*4-930-230-01	GUIDE, POINTER	
21	3-365-839-01	RETAINER (B)	
22	3-365-838-01	RETAINER (A)	
23	3-365-852-01	RETAINER (VC)	
24	*1-638-104-11	PC BOARD, GEQ VOL	
25	*1-638-105-11	PC BOARD, TC	
26	*A-3261-419-A	AUDIO MAIN BOARD, COMPLETE	
27	*4-920-997-01	GEAR, V.C.	
28	3-365-836-01	ARM, REC	
29	X-3362-582-1	CABINET SUB ASSY, FRONT	
30	3-366-933-01	PLATE ORNAMENTAL	
31	3-367-706-01	KNOB, BAND SELECT	
32	3-831-441-XX	CUSHION, CABINET, UPPER 10X7X0.3	
S304	1-571-330-21	SWITCH, LEAF (MD (A) POWER)	
S305	1-571-890-11	SWITCH, LEAF (REC PROOF)	
S306	1-571-330-21	SWITCH, LEAF (MD (B) POWER)	
S307	1-571-890-11	SWITCH, LEAF (120μ/70μ)	

6-2. REAR CABINET ASSEMBLY

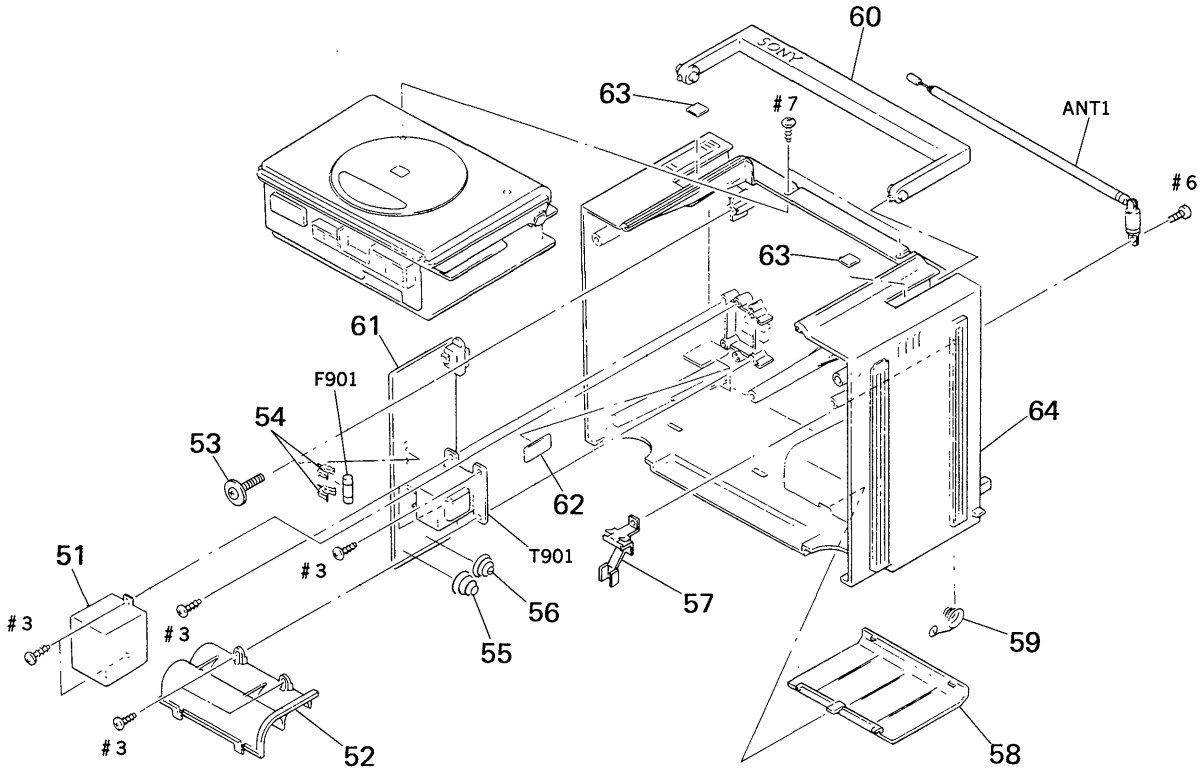

Note:	Note:
The components identified by mark ⚠ or dotted line with mark ⚠ are critical for safety. Replace only with part number specified.	Les composants identifiés par une marque ⚠ sont critiques pour la sécurité. Ne les remplacer que par une pièce portant le numéro spécifié.

Ref.No	Part No.	Description	Remarks
51	*4-930-252-01	PLATE, SHIELD	
52	*4-930-207-01	CASE, BATTERY RECEIVE	
53	3-365-853-01	SCREW +BTPWH 3X12	
54	1-533-217-31	HOLDER, FUSE	
55	4-920-988-01	SPRING (MINUS)	
56	4-930-222-01	SPRING (A)	
57	3-365-846-01	TERMINAL, ANT	
58	4-930-208-01	LID, BATTERY CASE	
59	4-920-987-01	SPRING (C)	

Ref.No	Part No.	Description	Remarks
60	4-930-206-01	HANDLE	
61	*1-629-992-11	PC BOARD, POWER	
62	3-831-441-XX	CUSHION, SPEAKER	
63	3-713-907-01	SPACER, CAM	
64	3-365-847-01	CABINET (REAR) (US)	
64	3-365-847-11	CABINET (REAR) (Canadian)	
ANT1	1-501-383-21	ANTENNA, TELESCOPIC	
F901	⚠1-576-030-11	FUSE, GLASS TUBE (5A 125V)	
T901	⚠1-449-613-11	TRANSFORMER, POWER	

6-3. CD UNIT ASSEMBLY

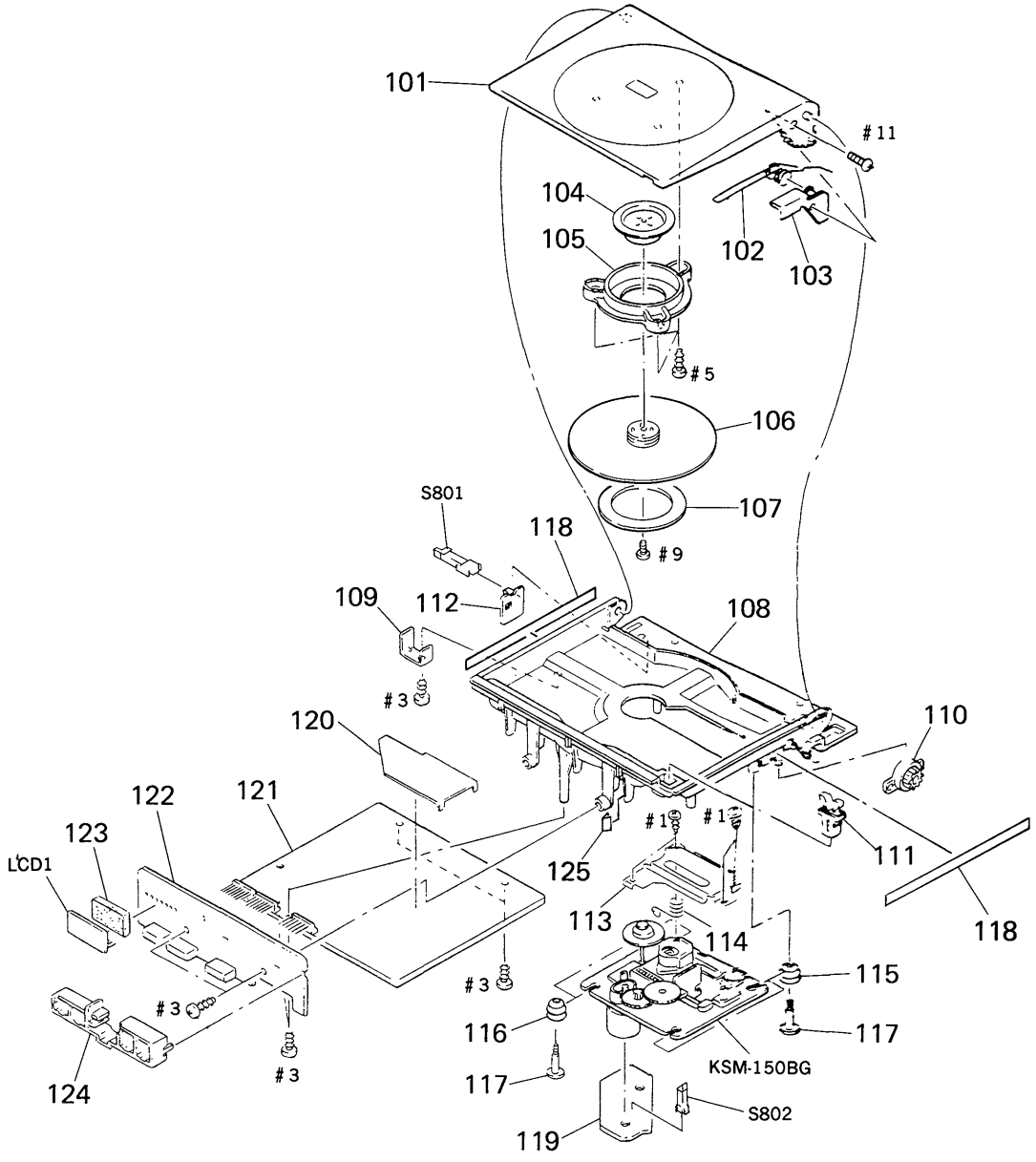

Ref.No	Part No.	Description	Remarks
101	X-4920-911-1	LID SUB ASSY, CD	
102	4-920-980-01	SPRING (CD)	
103	X-4920-910-1	PLATE ASSY, FULCRUM	
104	1-452-531-11	MAGNET	
105	4-925-922-11	COVER, CHUCKING	
106	3-704-435-01	PLATE (M), CHUCK	
107	3-365-837-01	WASHER	
108	4-930-216-01	CHASSIS (CD)	
109	*4-930-256-01	PLATE (LEFT)	
110	3-343-248-01	DAMPER (P), SMALL	
111	3-362-140-01	CATCHER, PUSH	
112	*1-629-996-11	PC BOARD, CD LEAF SW	
113	*4-928-936-01	COVER, CD	
114	4-931-358-01	SPRING	

Ref.No	Part No.	Description	Remarks
115	4-922-858-01	DAMPER	
116	4-922-858-11	DAMPER	
117	4-931-373-01	SCREW, CD FITTING	
118	3-831-441-11	CUSHION	
119	*1-629-995-11	PC BOARD, CD MOTOR	
120	*4-930-246-11	PAPER (N), SHIELD	
121	*A-3270-946-A	CD MAIN BOARD, COMPLETE	
122	*1-629-994-11	PC BOARD, CD CONTROL	
123	4-934-512-01	CUSHION (LCD)	
124	4-930-226-01	RETAINER, CD BUTTON	
125	3-831-441-XX	SPACER	
LCD1	1-808-930-11	DISPLAY PANEL, LIQUID CRYSTAL	
S801	1-570-822-21	SWITCH, LEAF (OPEN DET)	
S802	1-571-936-11	SWITCH, LEAF (LIMIT IN)	

6-4. OPTICAL BLOCK (KSM-150BG)

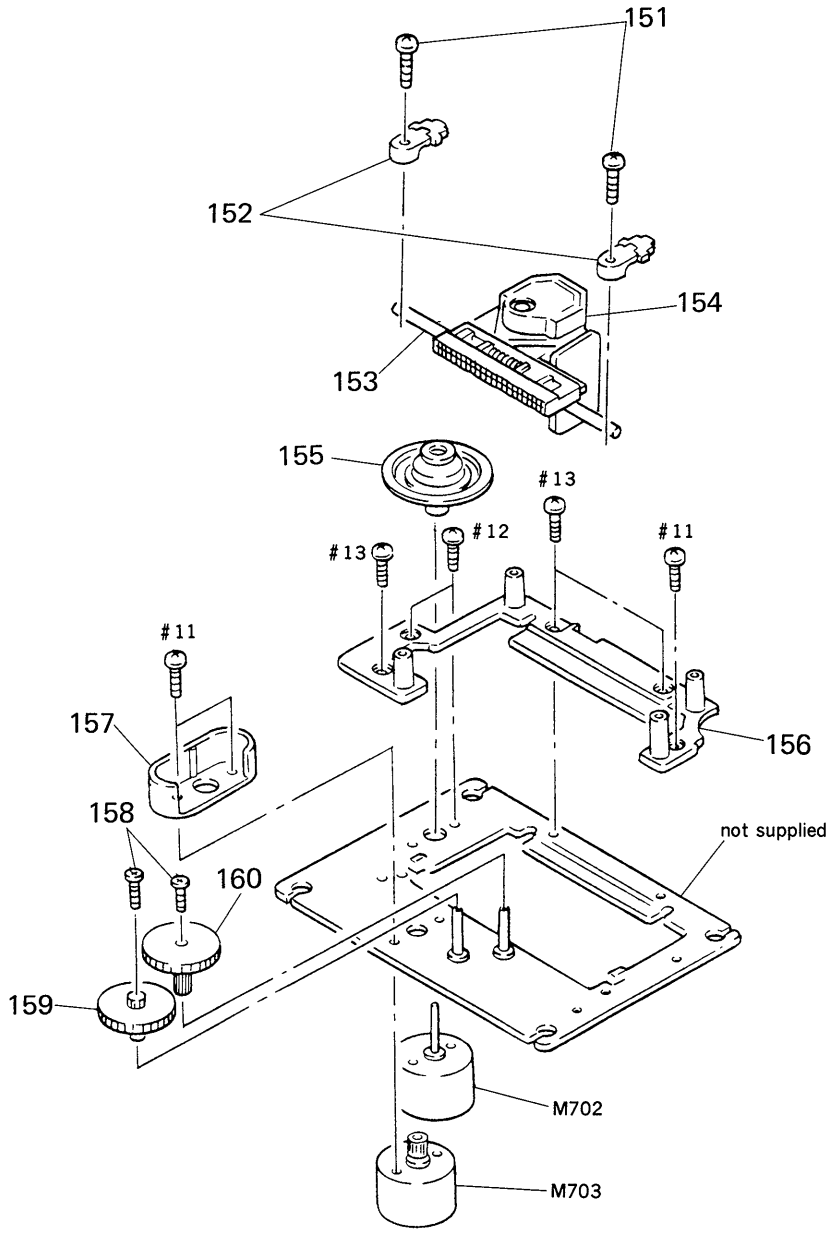

Ref.No	Part No.	Description	Remarks
151	2-641-447-01	SCREW (2.6X8), + STP	
152	2-641-448-02	CLAMP, SHAFT	
153	*4-910-431-01	SHAFT, SLIDE	
154	⚠8-848-137-11	DEVICE, OPTICAL KSS-150B(J)	
155	X-2640-771-1	TURNTABLE ASSY	
156	2-641-444-01	HOLDER (J), CHASSIS	
157	*2-641-434-01	COVER, GEAR	
158	3-303-809-31	SCREW (M1.7X3.0), SPECIAL HEAD	
159	2-641-403-05	GEAR (B)	
160	2-641-404-02	GEAR (A)	
M702	1-541-352-11	MOTOR, SPINDLE	
M703	X-2641-357-1	MOTOR ASSY, SLED (WITH GEAR)	

Note:
The components identified by mark ⚠ or dotted line with mark ⚠ are critical for safety. Replace only with part number specified.

Note:
Les composants identifiés par une marque ⚠ sont critiques pour la sécurité. Ne les remplacer que par une pièce portant le numéro spécifié.

6-5. MECHANISM BLOCK (1) (DECK A) (MF-460-64)

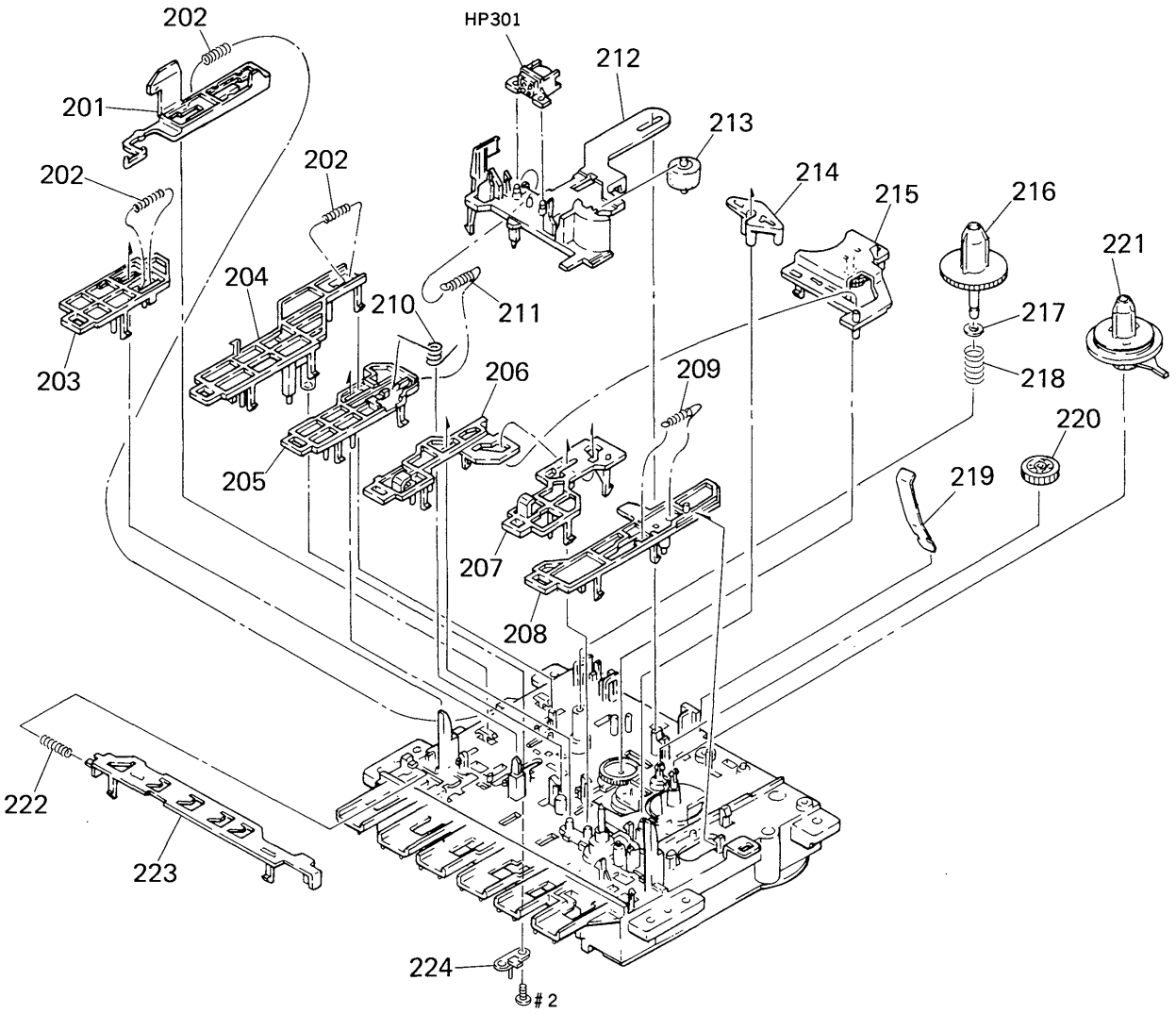

Ref.No	Part No.	Description	Remarks
201	4-936-206-01	SLIDER (S), EJECT	
202	4-932-648-01	SPRING, COMPRESSION	
203	4-928-985-01	LEVER, STOP	
204	4-921-195-01	LEVER (AC), REC	
205	4-928-991-01	LEVER, PLAY	
206	4-928-992-01	LEVER, REW	
207	4-928-993-01	LEVER, FF	
208	4-928-994-01	LEVER, PAUSE	
209	3-313-372-01	SPRING, TENSION	
210	4-928-973-01	SPRING	
211	4-928-972-01	SPRING, TENSION	
212	4-932-693-02	DECK (S), HEAD	
213	4-928-962-01	PINCH ROLLER	
214	4-928-982-01	LEVER (C)	
215	X-4920-347-1	LEVER (S) ASSY, FR	
216	4-928-978-01	GEAR (C), SUPPLY REEL	
217	4-931-795-11	WASHER	
218	3-343-381-01	SPRING, COMPRESSION	
219	4-928-957-01	RETAINER, CASSETTE	
220	3-343-285-01	GEAR, FF	
221	X-4920-350-1	GEAR (S) ASSY, T REEL	
222	4-932-656-01	SPRING, COMPRESSION	
223	4-932-695-01	SLIDER (FR), LOCK	
224	4-928-976-01	LEVER, SW	
HP301	1-543-628-11	HEAD, MAGNETIC (REC/PB)	

6-6. MECHANISM BLOCK (2) (DECK A) (MF-460-64)

Ⓐ: See page 41

Ⓑ: See page 41

Ⓒ: See page 41

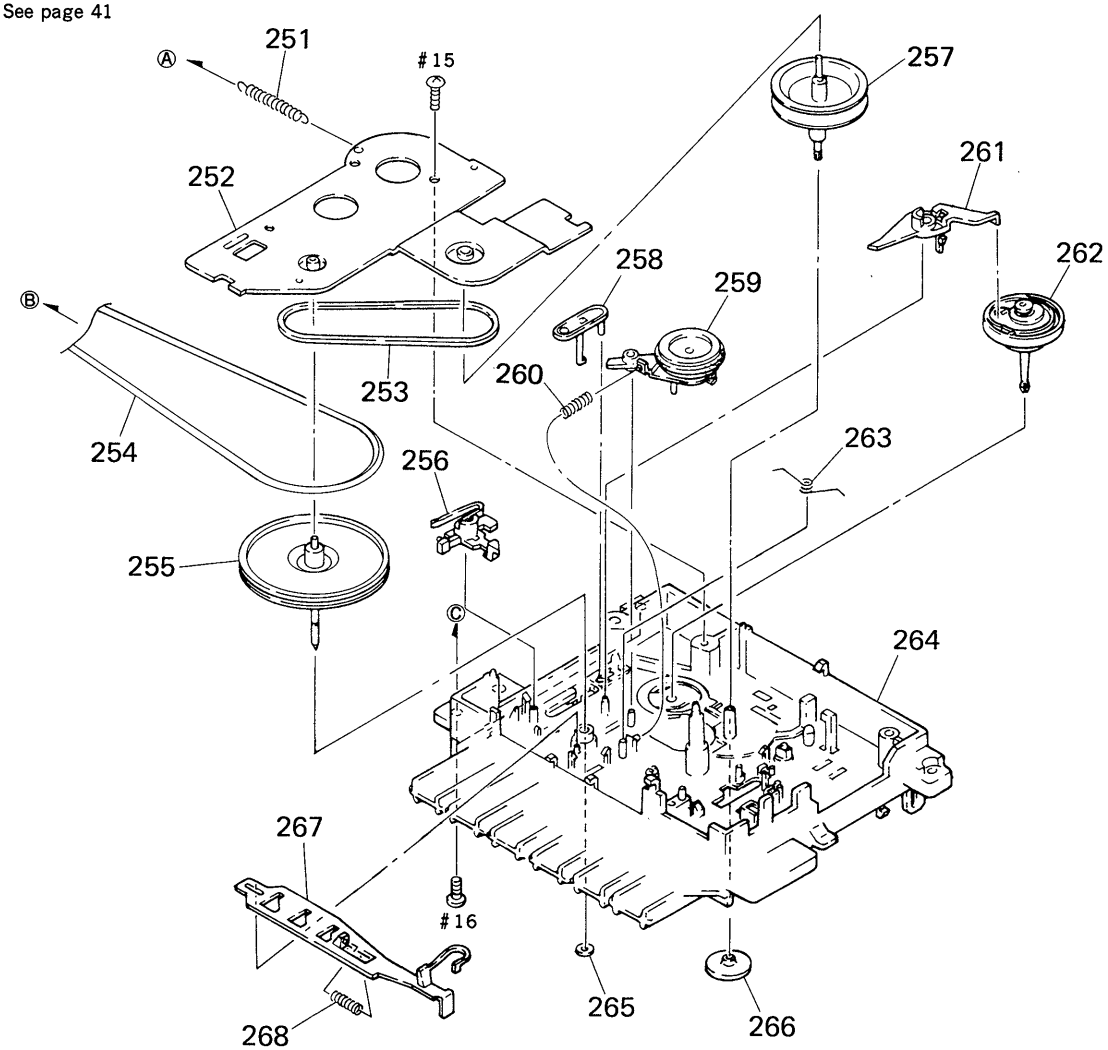

Ref.No	Part No.	Description	Remarks
251	3-322-527-01	SPRING, TENSION	
252	*X-4918-598-1	PLATE ASSY, GROUND	
253	4-928-974-01	BELT (MIDWAY)	
254	4-934-520-01	BELT	
255	X-4920-923-1	WHEEL (W) ASSY, CAPSTAN	
256	4-928-987-01	LEVER (T), SHUT-OFF	
257	X-4920-922-1	PULLEY (W) ASSY, FR	
258	4-928-961-01	PLATE, PAUSE LOCK	
259	X-4920-346-1	LEVER (S) ASSY, IDLER	
260	4-932-655-01	SPRING, COMPRESSION	
261	4-928-986-01	LEVER (S), SHUT-OFF	
262	X-4918-582-1	PLATE ASSY, TAKE-UP REEL	
263	4-928-958-01	SPRING, FR RETURN	
264	A-3208-379-A	CHASSIS (S) ASSY, MECHANISM	
265	3-343-358-01	RING, RETAINING	
266	4-928-967-01	GEAR (C), MIDWAY	
267	4-928-996-01	LEVER, SW	
268	4-932-656-01	SPRING, COMPRESSION	

6-7. MECHANISM BLOCK (3) (DECK B) (MF-460-64)

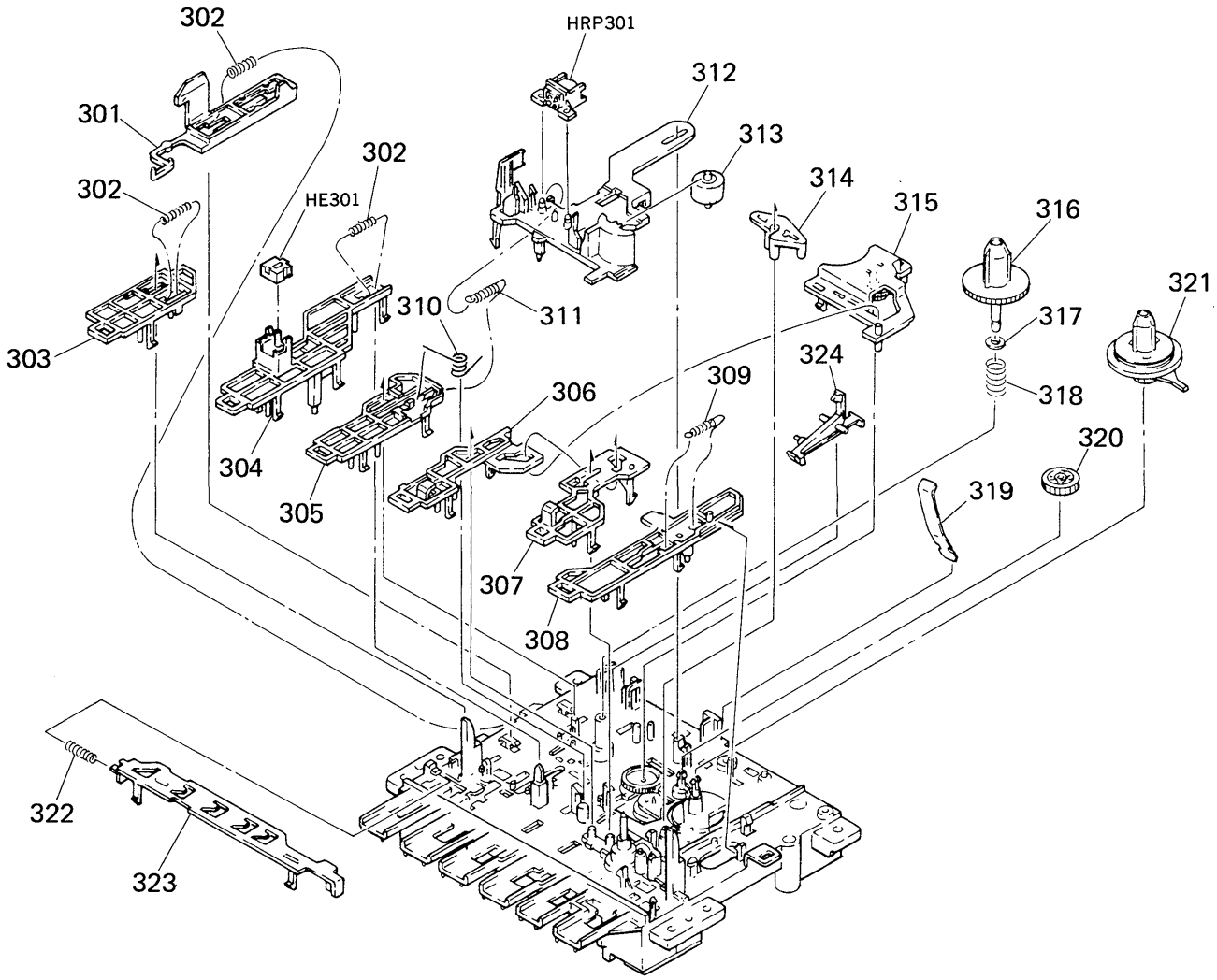

Ref.No	Part No.	Description	Remarks
301	4-936-206-01	SLIDER (S), EJECT	
302	4-932-648-01	SPRING, COMPRESSION	
303	4-928-985-01	LEVER, STOP	
304	4-934-511-01	LEVER (S), REC	
305	4-928-991-01	LEVER, PLAY	
306	4-928-992-01	LEVER, REW	
307	4-928-993-01	LEVER, FF	
308	4-928-994-01	LEVER, PAUSE	
309	3-313-372-01	SPRING, TENSION	
310	4-928-973-01	SPRING	
311	4-928-972-01	SPRING, TENSION	
312	4-932-693-02	DECK (S), HEAD	
313	4-928-962-01	PINCH ROLLER	

Ref.No	Part No.	Description	Remarks
314	4-928-982-01	LEVER (C)	
315	X-4920-347-1	LEVER (S) ASSY, FR	
316	4-928-978-01	GEAR (C), SUPPLY REEL	
317	4-931-795-11	WASHER	
318	3-343-381-01	SPRING, COMPRESSION	
319	4-928-957-01	RETAINER, CASSETTE	
320	3-343-285-01	GEAR, FF	
321	X-4920-350-1	GEAR (S) ASSY, T REEL	
322	4-932-656-01	SPRING, COMPRESSION	
323	4-932-695-01	SLIDER (FR), LOCK	
324	4-928-960-02	CLAW, SAFETY	
HE301	1-543-525-11	HEAD, MAGNETIC (ERASE)	
HRP301	1-543-628-11	HEAD, MAGNETIC (REC/PB)	

6-8. MECHANISM BLOCK (4) (DECK B) (MF-460-64)

Ⓐ: See page 39
Ⓑ: See page 39
Ⓒ: See page 39

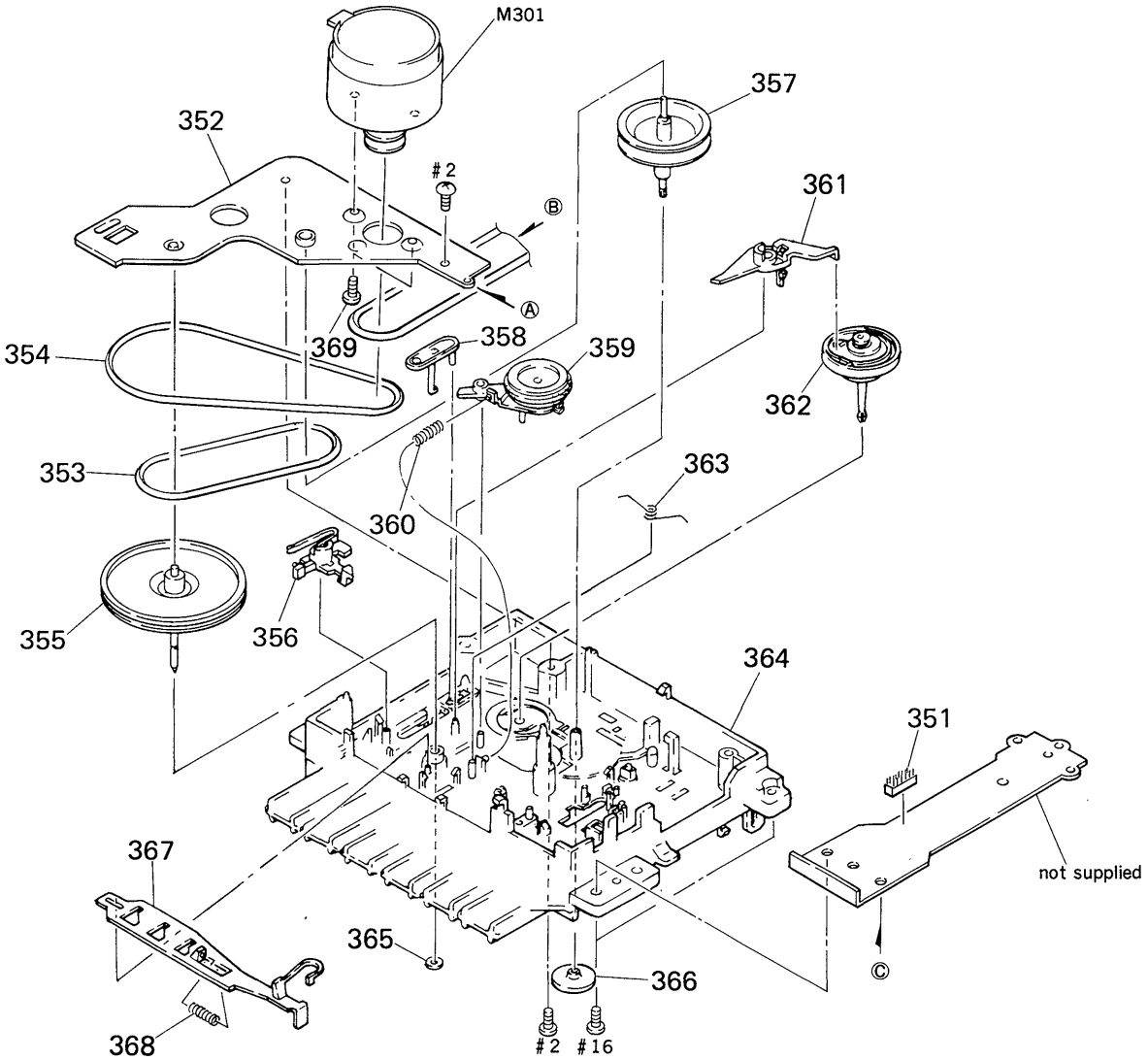

Ref.No	Part No.	Description	Remarks
351	4-934-522-01	CUSHION	
352	X-4920-921-1	PLATE (W) ASSY, GROUND	
353	4-928-974-01	BELT (MIDWAY)	
354	4-934-521-01	BELT	
355	X-4920-923-1	WHEEL (W) ASSY, CAPSTAN	
356	4-928-987-01	LEVER (T), SHUT-OFF	
357	X-4920-922-1	PULLEY (W) ASSY, FR	
358	4-928-961-01	PLATE, PAUSE LOCK	
359	X-4920-346-1	LEVER (S) ASSY, IDLER	
360	4-932-655-01	SPRING, COMPRESSION	
361	4-928-986-01	LEVER (S), SHUT-OFF	
362	X-4918-582-1	PLATE ASSY, TAKE-UP REEL	
363	4-928-958-01	SPRING, FR RETURN	
364	A-3208-379-A	CHASSIS (S) ASSY, MECHANISM	
365	3-343-358-01	RING, RETAINING	
366	4-928-967-01	GEAR (C), MIDWAY	
367	4-928-996-01	LEVER, SW	
368	4-932-656-01	SPRING, COMPRESSION	
369	3-343-251-01	SCREW (M2.6X2.5)	
M301	X-4920-924-1	MOTOR ASSY	

6-9. SPEAKER ASSEMBLY

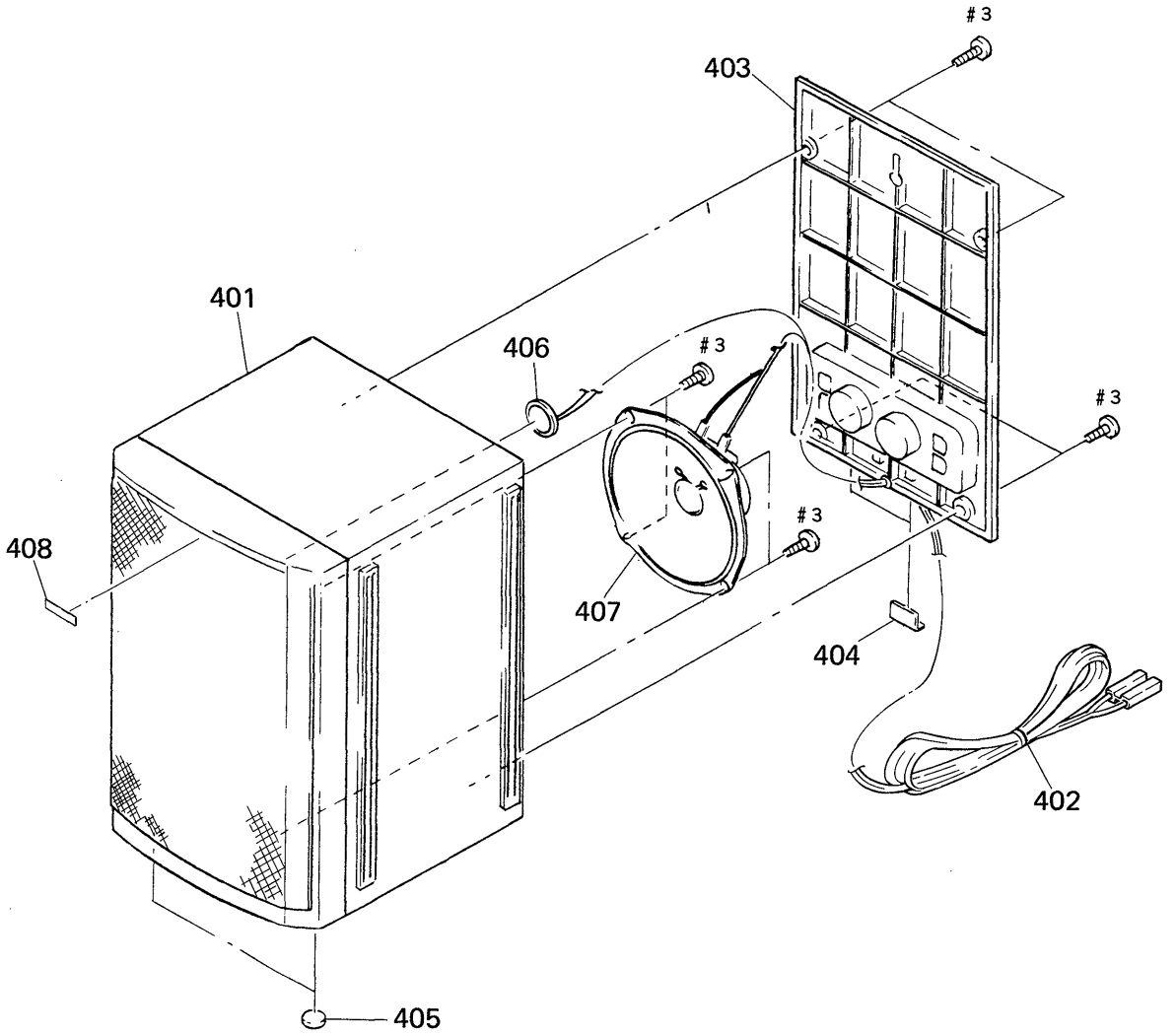

Ref.No	Part No.	Description	Remarks
401	X-3362-584-1	BOX (L) ASSY, SP	
401	X-3362-585-1	BOX (R) ASSY, SP	
402	1-559-620-11	CORD (WITH CONNECTOR)	
403	*4-930-212-01	LID, REAR, SP	
404	3-831-441-XX	CUSHION, SPEAKER	
405	4-930-231-01	FOOT	
406	1-529-058-11	BUZZER	
407	1-544-102-11	SPEAKER	
408	4-925-334-31	EMBLEM (5-A), SONY	

SECTION 7
ELECTRICAL PARTS LIST

AUDIO MAIN

NOTE:

- Due to standardization, replacements in the parts list may be different from the parts specified in the diagrams or the components used on the set.
- Items marked "*" are not stocked since they are seldom required for routine service. Some delay should be anticipated when ordering these items.
- If there are two or more same circuits in a set such as a stereophonic machine, only typical circuit parts may be indicated and capacitors and resistors in other same circuits may be omitted.

CAPACITORS:
MF: μF, PF: μμF.

RESISTORS
- All resistors are in ohms.
- F: nonflammable

COILS
- MMH: mH, UH: μH

SEMICONDUCTORS
In each case, U: μ, for example:
UA...: μA..., UPA...: μPA...,
UPC...: μPC, UPD...: μPD...

- Screw(#mark) list is given in the last of this parts list.

The components identified by mark ⚠ or dotted line with mark ⚠ are critical for safety.
Replace only with part number specified.

Les composants identifiés par une marque ⚠ sont critiques pour la sécurité.
Ne les remplacer que par une pièce portant le numéro spécifié.

Ref.No	Part No.	Description			Remark
	*A-3261-419-A	AUDIO MAIN BOARD, COMPLETE			
		**********			
		CAPACITOR			
C1	1-102-960-00	CERAMIC	24PF	5%	50V
C2	1-102-960-00	CERAMIC	24PF	5%	50V
C3	1-162-191-31	CERAMIC	2.2PF	10%	50V
C4	1-162-196-31	CERAMIC	5.6PF	10%	50V
C5	1-124-034-51	ELECT	33MF	20%	16V
C6	1-161-051-00	CERAMIC	0.01MF	20%	25V
C7	1-161-379-00	CERAMIC	0.01MF	30%	16V
C8	1-162-187-31	CERAMIC	1PF	20%	50V
C9	1-162-287-31	CERAMIC	270PF	10%	50V
C10	1-124-477-11	ELECT	47MF	20%	16V
C11	1-124-925-11	ELECT	2.2MF	20%	50V
C12	1-124-477-11	ELECT	47MF	20%	16V
C13	1-161-051-00	CERAMIC	0.01MF	20%	25V
C14	1-161-051-00	CERAMIC	0.01MF	20%	25V
C15	1-124-791-11	ELECT	1MF	20%	50V
C16	1-124-927-11	ELECT	4.7MF	20%	50V
C17	1-161-053-00	CERAMIC	0.015MF	10%	25V
C18	1-161-053-00	CERAMIC	0.015MF	10%	25V
C19	1-124-791-11	ELECT	1MF	20%	50V
C20	1-124-902-00	ELECT	0.47MF	20%	50V
C21	1-124-927-11	ELECT	4.7MF	20%	50V
C22	1-124-443-00	ELECT	100MF	20%	10V
C23	1-124-902-00	ELECT	0.47MF	20%	50V
C24	1-124-902-00	ELECT	0.47MF	20%	50V
C25	1-162-282-31	CERAMIC	100PF	10%	50V
C51	1-162-282-31	CERAMIC	100PF	10%	50V
C52	1-162-282-31	CERAMIC	100PF	10%	50V
C80	1-162-191-31	CERAMIC	2.2PF	10%	50V
C100	1-162-294-31	CERAMIC	0.001MF	10%	50V
C101	1-162-291-31	CERAMIC	560PF	10%	50V
C102	1-162-291-31	CERAMIC	560PF	10%	50V
C103	1-162-286-31	CERAMIC	220PF	10%	50V
C104	1-162-286-31	CERAMIC	220PF	10%	50V
C105	1-124-126-00	ELECT	47MF	20%	10V
C106	1-161-054-00	CERAMIC	0.018MF	10%	25V
C107	1-124-791-11	ELECT	1MF	20%	50V
C109	1-124-791-11	ELECT	1MF	20%	50V
C110	1-162-294-31	CERAMIC	0.001MF	10%	50V
C111	1-124-126-00	ELECT	47MF	20%	10V
C112	1-162-294-31	CERAMIC	0.001MF	10%	50V
C113	1-162-294-31	CERAMIC	0.001MF	10%	50V
C114	1-124-791-11	ELECT	1MF	20%	50V
C115	1-162-290-31	CERAMIC	470PF	10%	50V
C116	1-124-791-11	ELECT	1MF	20%	50V
C117	1-124-927-11	ELECT	4.7MF	20%	50V
C118	1-124-927-11	ELECT	4.7MF	20%	50V
C119	1-161-375-00	CERAMIC	0.0022MF	30%	16V
C120	1-124-443-00	ELECT	100MF	20%	10V
C121	1-124-443-00	ELECT	100MF	20%	10V
C122	1-124-473-11	ELECT	1000MF	20%	10V
C123	1-136-169-00	FILM	0.22MF	5%	50V
C200	1-162-294-31	CERAMIC	0.001MF	10%	50V
C201	1-162-291-31	CERAMIC	560PF	10%	50V
C202	1-162-291-31	CERAMIC	560PF	10%	50V
C203	1-162-286-31	CERAMIC	220PF	10%	50V
C204	1-162-286-31	CERAMIC	220PF	10%	50V
C205	1-124-126-00	ELECT	47MF	20%	10V
C206	1-161-054-00	CERAMIC	0.018MF	10%	25V
C207	1-124-791-11	ELECT	1MF	20%	50V
C209	1-124-791-11	ELECT	1MF	20%	50V
C210	1-162-294-31	CERAMIC	0.001MF	10%	50V
C211	1-124-126-00	ELECT	47MF	20%	10V
C212	1-162-294-31	CERAMIC	0.001MF	10%	50V
C213	1-162-294-31	CERAMIC	0.001MF	10%	50V
C214	1-124-791-11	ELECT	1MF	20%	50V
C215	1-162-290-31	CERAMIC	470PF	10%	50V
C216	1-124-791-11	ELECT	1MF	20%	50V
C217	1-124-927-11	ELECT	4.7MF	20%	50V
C218	1-124-927-11	ELECT	4.7MF	20%	50V
C219	1-161-375-00	CERAMIC	0.0022MF	30%	16V
C220	1-124-443-00	ELECT	100MF	20%	10V
C221	1-124-443-00	ELECT	100MF	20%	10V
C222	1-124-473-11	ELECT	1000MF	20%	10V
C223	1-136-169-00	FILM	0.22MF	5%	50V
C301	1-130-470-00	MYLAR	820PF	5%	50V
C302	1-130-473-00	MYLAR	0.0015MF	5%	50V
C303	1-130-482-00	MYLAR	0.0082MF	5%	50V
C304	1-124-126-00	ELECT	47MF	20%	10V
C305	1-130-479-00	MYLAR	0.0047MF	5%	50V
C307	1-124-126-00	ELECT	47MF	20%	10V
C308	1-123-875-11	ELECT	10MF	20%	50V
C309	1-124-925-11	ELECT	2.2MF	20%	50V
C310	1-126-176-11	ELECT	220MF	20%	10V
C311	1-124-925-11	ELECT	2.2MF	20%	50V
C312	1-123-875-11	ELECT	10MF	20%	50V
C313	1-124-034-51	ELECT	33MF	20%	16V
C314	1-124-902-00	ELECT	0.47MF	20%	50V
C315	1-162-282-31	CERAMIC	100PF	10%	50V
C316	1-162-282-31	CERAMIC	100PF	10%	50V
C317	1-161-377-00	CERAMIC	0.0047MF	30%	16V
C318	1-124-443-00	ELECT	100MF	20%	10V
C319	1-124-927-11	ELECT	4.7MF	20%	50V
C320	1-124-443-00	ELECT	100MF	20%	10V
C321	1-124-120-11	ELECT	220MF	20%	16V
C322	1-162-294-31	CERAMIC	0.001MF	10%	50V
C323	1-123-875-11	ELECT	10MF	20%	50V
C324	1-124-480-11	ELECT	470MF	20%	25V
C325	1-161-379-00	CERAMIC	0.01MF	30%	16V
C326	1-161-379-00	CERAMIC	0.01MF	30%	16V
C327	1-124-120-11	ELECT	220MF	20%	16V
C328	1-124-120-11	ELECT	220MF	20%	16V
C329	1-161-379-00	CERAMIC	0.01MF	30%	16V
C330	1-161-379-00	CERAMIC	0.01MF	30%	16V
C331	1-124-120-11	ELECT	220MF	20%	16V
C332	1-124-120-11	ELECT	220MF	20%	16V

AUDIO MAIN

Ref.No	Part No.	Description			Remark
C333	1-124-120-11	ELECT	220MF	20%	16V
C334	1-161-379-00	CERAMIC	0.01MF	30%	16V
C335	1-124-120-11	ELECT	220MF	20%	16V
C336	1-161-379-00	CERAMIC	0.01MF	30%	16V
C337	1-124-902-00	ELECT	0.47MF	20%	50V
C338	1-161-379-00	CERAMIC	0.01MF	30%	16V
C339	1-123-875-11	ELECT	10MF	20%	50V
C340	1-124-443-00	ELECT	100MF	20%	10V
C347	1-124-902-00	ELECT	0.47MF	20%	50V
C351	1-124-925-11	ELECT	2.2MF	20%	50V

CERAMIC FILTER

CF1	1-577-599-81	FILTER, CERAMIC
CF2	1-577-599-81	FILTER, CERAMIC
CF3	1-577-599-81	FILTER, CERAMIC

CONNECTOR

CNP301	*1-506-986-11	PIN, CONNECTOR (PC BOARD) 4P
CNP302	*1-506-986-11	PIN, CONNECTOR (PC BOARD) 4P
CNP303	*1-566-824-11	PIN, CONNECTOR (PC BOARD) 3P
CNP304	*1-506-988-11	PIN, CONNECTOR (PC BOARD) 6P
CNP305	*1-565-302-11	PIN, CONNECTOR (PC BOARD) 6P
CNP306	*1-566-973-11	PIN, CONNECTOR (PC BOARD) 8P
CNP309	*1-506-990-11	PIN, CONNECTOR (PC BOARD) 8P

COMBINATION PARTS

CP1	1-236-079-11	ENCAPSULATED COMPONENT

VARIABLE CAPACITOR

CT1-4, CV1-4	1-151-624-11	CAP, VARIABLE

DIODE

D1	8-719-911-19	DIODE 1SS119
D2	8-719-911-19	DIODE 1SS119
D3	8-719-304-78	DIODE SEL2210R-D
D301	8-719-911-19	DIODE 1SS119
D302	8-719-911-19	DIODE 1SS119
D303	8-719-911-19	DIODE 1SS119
D304	8-719-109-97	DIODE RD6.8ES-B2
D305	8-719-911-19	DIODE 1SS119
D306	8-719-304-78	DIODE SEL2210R-D
D307	8-719-921-75	DIODE MTZN-10B
D308	8-719-109-93	DIODE RD6.2ES-B2
D309	8-719-921-75	DIODE MTZN-10B
D310	8-719-911-19	DIODE 1SS119
D311	8-719-911-19	DIODE 1SS119
D312	8-719-911-19	DIODE 1SS119
D313	8-719-109-93	DIODE RD6.2ES-B2

FILTER

FL1	1-236-022-11	FILTER, BAND PASS

IC

IC1	8-752-035-68	IC CXA1238S
IC301	8-759-242-58	IC TA8189N
IC302	8-752-052-45	IC CXA1352S
IC303	8-759-820-22	IC LA4597

JACK

J301	1-563-330-11	JACK (MIX MIC)
J302	1-566-891-11	JACK (PHONES)
J303	1-537-114-11	TERMINAL BOARD (SPEAKER OUT)

COIL

L1	*1-428-029-11	COIL, AIR-CORE
L2	*1-422-354-11	COIL, AIR-CORE
L3	1-402-435-11	ANTENNA, FERRITE-ROD (MW)
L4	1-408-417-00	INDUCTOR 47UH

TRANSISTOR

Q5	1-807-870-11	TRANSISTOR KSR1008
Q6	1-807-870-11	TRANSISTOR KSR1008
Q102	1-807-870-11	TRANSISTOR KSR1008
Q202	1-807-870-11	TRANSISTOR KSR1008
Q301	1-807-868-11	TRANSISTOR KSR1006
Q302	1-807-868-11	TRANSISTOR KSR1006
Q303	1-807-543-11	TRANSISTOR KSC1008-R
Q304	8-729-119-76	TRANSISTOR 2SA1175-HFE
Q305	8-729-119-78	TRANSISTOR 2SC2785-HFE
Q306	8-729-905-67	TRANSISTOR 2SD1944-K
Q308	1-807-868-11	TRANSISTOR KSR1006
Q309	8-729-107-26	TRANSISTOR 2SD1815-K
Q311	1-807-868-11	TRANSISTOR KSR1006
Q313	8-729-107-26	TRANSISTOR 2SD1815-K
Q319	8-729-119-78	TRANSISTOR 2SC2785-HFE
Q320	1-807-868-11	TRANSISTOR KSR1006
Q321	8-729-119-78	TRANSISTOR 2SC2785-HFE
Q322	8-729-119-78	TRANSISTOR 2SC2785-HFE
Q323	1-807-868-11	TRANSISTOR KSR1006

RESISTOR

R1	1-249-441-11	CARBON	100K	5%	1/4W
R2	1-249-421-11	CARBON	2.2K	5%	1/4W
R3	1-249-415-11	CARBON	680	5%	1/4W
R4	1-249-407-11	CARBON	150	5%	1/4W
R5	1-249-401-11	CARBON	47	5%	1/4W
R6	1-249-427-11	CARBON	6.8K	5%	1/4W
R7	1-249-427-11	CARBON	6.8K	5%	1/4W
R8	1-247-887-00	CARBON	220K	5%	1/4W
R9	1-247-887-00	CARBON	220K	5%	1/4W
R10	1-249-421-11	CARBON	2.2K	5%	1/4W
R11	1-249-429-11	CARBON	10K	5%	1/4W
R12	1-249-409-11	CARBON	220	5%	1/4W
R14	1-249-426-11	CARBON	5.6K	5%	1/4W
R16	1-249-397-11	CARBON	22	5%	1/4W
R50	1-249-429-11	CARBON	10K	5%	1/4W
R51	1-249-429-11	CARBON	10K	5%	1/4W
R101	1-249-425-11	CARBON	4.7K	5%	1/4W
R102	1-249-439-11	CARBON	68K	5%	1/4W
R103	1-249-417-11	CARBON	1K	5%	1/4W
R104	1-249-417-11	CARBON	1K	5%	1/4W
R105	1-247-885-00	CARBON	180K	5%	1/4W
R106	1-249-427-11	CARBON	6.8K	5%	1/4W
R107	1-249-429-11	CARBON	10K	5%	1/4W
R108	1-249-421-11	CARBON	2.2K	5%	1/4W
R109	1-249-427-11	CARBON	6.8K	5%	1/4W
R110	1-249-405-11	CARBON	100	5%	1/4W
R111	1-249-422-11	CARBON	2.7K	5%	1/4W
R112	1-247-870-11	CARBON	43K	5%	1/4W
R113	1-249-421-11	CARBON	2.2K	5%	1/4W
R114	1-249-421-11	CARBON	2.2K	5%	1/4W
R115	1-247-890-11	CARBON	300K	5%	1/4W
R116	1-249-407-11	CARBON	150	5%	1/4W
R117	1-247-885-00	CARBON	180K	5%	1/4W
R118	1-249-426-11	CARBON	5.6K	5%	1/4W
R119	1-249-430-11	CARBON	12K	5%	1/4W
R120	1-249-423-11	CARBON	3.3K	5%	1/4W
R121	1-249-435-11	CARBON	33K	5%	1/4W

AUDIO MAIN | CD CONTROL | CD LEAF SW | CD MAIN

Ref.No	Part No.	Description				Remark
R122	1-249-431-11	CARBON	15K	5%	1/4W	
R123	1-249-425-11	CARBON	4.7K	5%	1/4W	
R124	1-249-406-11	CARBON	120	5%	1/4W	
R125	1-249-427-11	CARBON	6.8K	5%	1/4W	
R201	1-249-425-11	CARBON	4.7K	5%	1/4W	
R202	1-249-439-11	CARBON	68K	5%	1/4W	
R203	1-249-417-11	CARBON	1K	5%	1/4W	
R204	1-249-417-11	CARBON	1K	5%	1/4W	
R205	1-247-885-00	CARBON	180K	5%	1/4W	
R206	1-249-427-11	CARBON	6.8K	5%	1/4W	
R207	1-249-429-11	CARBON	10K	5%	1/4W	
R208	1-249-421-11	CARBON	2.2K	5%	1/4W	
R209	1-249-427-11	CARBON	6.8K	5%	1/4W	
R210	1-249-405-11	CARBON	100	5%	1/4W	
R211	1-249-422-11	CARBON	2.7K	5%	1/4W	
R212	1-247-870-11	CARBON	43K	5%	1/4W	
R213	1-249-421-11	CARBON	2.2K	5%	1/4W	
R214	1-249-421-11	CARBON	2.2K	5%	1/4W	
R215	1-247-890-11	CARBON	300K	5%	1/4W	
R216	1-249-407-11	CARBON	150	5%	1/4W	
R217	1-247-885-00	CARBON	180K	5%	1/4W	
R218	1-249-426-11	CARBON	5.6K	5%	1/4W	
R219	1-249-430-11	CARBON	12K	5%	1/4W	
R220	1-249-423-11	CARBON	3.3K	5%	1/4W	
R221	1-249-435-11	CARBON	33K	5%	1/4W	
R222	1-249-431-11	CARBON	15K	5%	1/4W	
R223	1-249-425-11	CARBON	4.7K	5%	1/4W	
R224	1-249-406-11	CARBON	120	5%	1/4W	
R225	1-249-427-11	CARBON	6.8K	5%	1/4W	
R304	1-249-409-11	CARBON	220	5%	1/4W	
R305	1-249-417-11	CARBON	1K	5%	1/4W	
R306	1-249-435-11	CARBON	33K	5%	1/4W	
R307	1-249-389-11	CARBON	4.7	5%	1/4W	
R308	1-249-432-11	CARBON	18K	5%	1/4W	
R309	1-249-429-11	CARBON	10K	5%	1/4W	
R310	1-249-429-11	CARBON	10K	5%	1/4W	
R311	1-249-431-11	CARBON	15K	5%	1/4W	
R312	1-249-421-11	CARBON	2.2K	5%	1/4W	
R313	1-249-402-11	CARBON	56	5%	1/4W	
R314	1-249-423-11	CARBON	3.3K	5%	1/4W	
R315	1-249-418-11	CARBON	1.2K	5%	1/4W	
R316	1-247-903-00	CARBON	1M	5%	1/4W	
R317	1-247-884-11	CARBON	160K	5%	1/4W	
R318	1-247-901-11	CARBON	820K	5%	1/4W	
R319	⚠1-249-381-11	CARBON	1	5%	1/4W	F
R320	1-249-417-11	CARBON	1K	5%	1/4W	
R321	1-249-409-11	CARBON	220	5%	1/4W	
R322	1-249-418-11	CARBON	1.2K	5%	1/4W	
R323	⚠1-217-639-00	FUSIBLE	2.2	5%	1/4W	F
R324	1-249-423-11	CARBON	3.3K	5%	1/4W	
R325	1-249-415-11	CARBON	680	5%	1/4W	
R326	⚠1-212-938-00	FUSIBLE	1.5	5%	1/2W	F
R327	1-249-411-11	CARBON	330	5%	1/4W	
R328	1-249-413-11	CARBON	470	5%	1/4W	
R330	1-249-425-11	CARBON	4.7K	5%	1/4W	
R332	⚠1-249-383-11	CARBON	1.5	5%	1/4W	F
R336	1-247-804-11	CARBON	75	5%	1/4W	
R337	1-249-411-11	CARBON	330	5%	1/4W	
R338	1-249-429-11	CARBON	10K	5%	1/4W	
R339	1-249-425-11	CARBON	4.7K	5%	1/4W	
R340	1-249-410-11	CARBON	270	5%	1/4W	
R341	1-249-421-11	CARBON	2.2K	5%	1/4W	
R342	1-247-895-00	CARBON	470K	5%	1/4W	
R343	1-249-427-11	CARBON	6.8K	5%	1/4W	
R344	1-249-427-11	CARBON	6.8K	5%	1/4W	
R345	1-249-437-11	CARBON	47K	5%	1/4W	
R346	1-249-426-11	CARBON	5.6K	5%	1/4W	
R347	1-249-407-11	CARBON	150	5%	1/4W	
R348	1-249-418-11	CARBON	1.2K	5%	1/4W	
R350	1-249-428-11	CARBON	8.2K	5%	1/4W	
R351	1-249-409-11	CARBON	220	5%	1/4W	
R353	1-249-428-11	CARBON	8.2K	5%	1/4W	
R354	1-249-417-11	CARBON	1K	5%	1/4W	

VARIABLE RESISTOR

RV1	1-238-017-11	RES, ADJ, CARBON 22K
RV302	1-238-480-11	RES, VAR, CARBON 50K (VOLUME)

SWITCH

S1	1-572-668-11	SWITCH, LEVER SLIDE (BAND)
S301	1-570-916-11	SWITCH, SLIDE (REC/PB)
S302	1-572-669-11	SWITCH, LEVER SLIDE (FUNCTION)
S303	1-571-307-11	SWITCH, SLIDE (ISS)

TRANSFORMER

T1	1-406-040-00	COIL (OSC)
T301	1-433-332-11	OSCILLATION TRANSFORMER, BIAS

****

*1-629-994-11 CD CONTROL BOARD
****

CONNECTOR

CN811	*1-568-451-11	HOUSING,CONNECTOR(PC BOARD)10P
CN812	*1-568-451-11	HOUSING,CONNECTOR(PC BOARD)10P
CN813	*1-568-451-11	HOUSING,CONNECTOR(PC BOARD)10P

INDICATOR

LCD1	1-808-930-11	DISPLAY PANEL, LIQUID CRYSTAL

SWITCH

S803	1-571-530-11	SWITCH, KEY BOARD (PLAY ▶)
S804	1-571-530-11	SWITCH, KEY BOARD (STOP ■)
S805	1-571-530-11	SWITCH, KEY BOARD (AMS SEARCH ▶▶I)
S806	1-571-530-11	SWITCH, KEY BOARD (AMS SEARCH I◀◀)
S807	1-571-530-11	SWITCH, KEY BOARD (PAUSE II)
S808	1-571-530-11	SWITCH, KEY BOARD (PLAY MODE)
S809	1-571-530-11	SWITCH, KEY BOARD (REMAIN/ENTER)

****

*1-629-996-11 CD LEAF SW BOARD
****

CONNECTOR

W716	1-506-569-11	PIN, CONNECTOR 3P

****

A-3270-946-A CD MAIN BOARD, COMPLETE
****

CAPACITOR

C701	1-130-475-00	MYLAR	0.0022MF	5%	50V
C702	1-124-034-51	ELECT	33MF	20%	16V
C703	1-162-294-31	CERAMIC	0.001MF	10%	50V
C704	1-124-443-00	ELECT	100MF	20%	6.3V
C705	1-126-176-11	ELECT	220MF	20%	6.3V

Note:
The components identified by mark ⚠ or dotted line with mark ⚠ are critical for safety. Replace only with part number specified.

Note:
Les composants identifiés par une marque ⚠ sont critiques pour la sécurité.
Ne les remplacer que par une pièce portant le numéro spécifié.

CD MAIN

Ref.No	Part No.	Description			Remark
C706	1-130-489-00	MYLAR	0.033MF	5%	50V
C707	1-131-374-00	TANTALUM	33MF	10%	3.15V
C708	1-130-489-00	MYLAR	0.033MF	5%	50V
C709	1-130-483-00	MYLAR	0.01MF	5%	50V
C710	1-124-034-51	ELECT	33MF	20%	16V
C711	1-162-207-31	CERAMIC	22PF	5%	50V
C712	1-162-207-31	CERAMIC	22PF	5%	50V
C713	1-124-472-11	ELECT	470MF	20%	10V
C714	1-161-379-00	CERAMIC	0.01MF	30%	16V
C715	1-136-173-00	FILM	0.47MF	5%	50V
C716	1-130-483-00	MYLAR	0.01MF	5%	50V
C717	1-162-294-31	CERAMIC	0.001MF	10%	50V
C718	1-124-902-00	ELECT	0.47MF	20%	50V
C719	1-162-851-11	CERAMIC	0.1MF	10%	16V
C720	1-130-489-00	MYLAR	0.033MF	5%	50V
C721	1-124-034-51	ELECT	33MF	20%	16V
C722	1-130-475-00	MYLAR	0.0022MF	5%	50V
C723	1-161-021-11	CERAMIC	0.047MF	10%	25V
C724	1-162-294-31	CERAMIC	0.001MF	10%	50V
C725	1-136-165-00	FILM	0.1MF	5%	50V
C726	1-136-165-00	FILM	0.1MF	5%	50V
C727	1-124-034-51	ELECT	33MF	20%	16V
C728	1-131-377-00	TANTALUM	10MF	10%	6.3V
C729	1-136-165-00	FILM	0.1MF	5%	50V
C730	1-123-875-11	ELECT	10MF	20%	50V
C731	1-161-061-11	CERAMIC	0.068MF	10%	25V
C732	1-162-215-31	CERAMIC	47PF	5%	50V
C733	1-124-034-51	ELECT	33MF	20%	16V
C734	1-130-481-00	MYLAR	0.0068MF	5%	50V
C735	1-162-284-31	CERAMIC	150PF	10%	50V
C736	1-161-379-00	CERAMIC	0.01MF	30%	16V
C737	1-161-379-00	CERAMIC	0.01MF	30%	16V
C738	1-161-379-00	CERAMIC	0.01MF	30%	16V
C739	1-161-379-00	CERAMIC	0.01MF	30%	16V
C740	1-124-034-51	ELECT	33MF	20%	16V
C743	1-130-479-00	MYLAR	0.0047MF	5%	50V
C744	1-124-791-11	ELECT	1MF	20%	50V
C745	1-130-475-00	MYLAR	0.0022MF	5%	50V
C746	1-130-469-00	MYLAR	680PF	5%	50V
C747	1-102-960-00	CERAMIC	24PF	5%	50V
C748	1-126-176-11	ELECT	220MF	20%	6.3V
C749	1-124-791-11	ELECT	1MF	20%	50V
C750	1-130-488-00	MYLAR	0.027MF	5%	50V
C751	1-124-791-11	ELECT	1MF	20%	50V
C752	1-124-604-00	ELECT	330MF	20%	10V
C753	1-126-176-11	ELECT	220MF	20%	6.3V
C754	1-126-301-11	ELECT	1MF	20%	50V
C755	1-130-475-00	MYLAR	0.0022MF	5%	50V
C756	1-130-469-00	MYLAR	680PF	5%	50V
C757	1-102-960-00	CERAMIC	24PF	5%	50V
C758	1-124-791-11	ELECT	1MF	20%	50V
C759	1-124-791-11	ELECT	1MF	20%	50V
C760	1-130-488-00	MYLAR	0.027MF	5%	50V
C761	1-136-173-00	FILM	0.47MF	5%	50V
C763	1-162-199-31	CERAMIC	10PF	5%	50V
C764	1-162-199-31	CERAMIC	10PF	5%	50V
C765	1-162-294-31	CERAMIC	0.001MF	10%	50V
C770	1-124-360-00	ELECT	1000MF	20%	16V
C771	1-124-791-11	ELECT	1MF	20%	50V
C780	1-124-034-51	ELECT	33MF	20%	16V
C781	1-124-034-51	ELECT	33MF	20%	16V
C784	1-126-176-11	ELECT	220MF	20%	6.3V
C790	1-161-379-00	CERAMIC	0.01MF	30%	16V
C791	1-124-927-11	ELECT	4.7MF	20%	50V
C792	1-124-791-11	ELECT	1MF	20%	50V
C794	1-124-791-11	ELECT	1MF	20%	50V
C801	1-124-034-51	ELECT	33MF	20%	16V
C802	1-161-379-00	CERAMIC	0.01MF	30%	16V
C803	1-162-219-31	CERAMIC	68PF	5%	50V
C804	1-162-219-31	CERAMIC	68PF	5%	50V
C851	1-162-292-31	CERAMIC	680PF	10%	50V
C852	1-162-215-31	CERAMIC	47PF	5%	50V
C853	1-162-215-31	CERAMIC	47PF	5%	50V
C856	1-162-294-31	CERAMIC	0.001MF	10%	50V

CONNECTOR

CN701	*1-564-710-11	PIN, CONNECTOR (SMALL TYPE) 8P
CN702	*1-564-710-11	PIN, CONNECTOR (SMALL TYPE) 8P
CN703	*1-506-988-11	PIN, CONNECTOR (PC BOARD) 6P
CN704	*1-506-988-11	PIN, CONNECTOR (PC BOARD) 6P
CN705	*1-506-985-11	PIN, CONNECTOR (PC BOARD) 3P
CN706	*1-562-477-11	CONNECTOR (SOCKET) 3P
W801	*1-568-455-11	PIN, CONNECTOR (PC BOARD) 10P
W802	*1-568-455-11	PIN, CONNECTOR (PC BOARD) 10P
W803	*1-568-455-11	PIN, CONNECTOR (PC BOARD) 10P

DIODE

D701	8-719-911-19	DIODE 1SS119
D702	8-719-911-19	DIODE 1SS119
D801	8-719-911-19	DIODE 1SS119
D802	8-719-911-19	DIODE 1SS119
D804	8-719-911-19	DIODE 1SS119
D805	8-719-911-19	DIODE 1SS119

IC

IC701	8-752-033-14	IC CXA1081Q
IC702	8-752-032-32	IC CXA1182Q-Z
IC703	8-752-328-46	IC CXD1130Q
IC704	8-759-984-09	IC LH5116NA-10
IC706	8-759-710-98	IC NJM2100D
IC707	8-759-148-30	IC UPD6376GS
IC708	8-759-501-65	IC BA6294
IC709	8-759-501-65	IC BA6294
IC801	8-752-814-10	IC CXP5024-092Q
IC802	1-807-547-11	IC MC4558-C
IC804	8-759-971-11	IC PST529D

COIL

L701	1-410-316-11	INDUCTOR	1UH
L702	1-410-678-31	INDUCTOR	220UH
L703	1-410-316-11	INDUCTOR	1UH
L704	1-410-678-31	INDUCTOR	220UH
L705	1-424-090-11	COIL, LINE FILTER	

TRANSISTOR

Q701	8-729-801-84	TRANSISTOR 2SB1013
Q702	8-729-119-78	TRANSISTOR 2SC2785-HFE
Q703	8-729-119-78	TRANSISTOR 2SC2785-HFE
Q704	8-729-119-78	TRANSISTOR 2SC2785-HFE
Q705	1-807-877-11	TRANSISTOR KSR2003
Q706	8-729-119-76	TRANSISTOR 2SA1175-HFE
Q711	1-807-865-11	TRANSISTOR KSR1003
Q712	8-729-119-78	TRANSISTOR 2SC2785-HFE
Q713	8-729-119-78	TRANSISTOR 2SC2785-HFE
Q714	1-807-877-11	TRANSISTOR KSR2003
Q791	1-807-865-11	TRANSISTOR KSR1003
Q792	1-807-865-11	TRANSISTOR KSR1003
Q801	1-807-877-11	TRANSISTOR KSR2003
Q802	1-807-871-11	TRANSISTOR KSR1009
Q803	8-729-119-78	TRANSISTOR 2SC2785-HFE

CD MAIN | CD MOTOR | GEQ VOL

Ref.No	Part No.	Description				Remark
		RESISTOR				
R701	1-249-433-11	CARBON	22K	5%	1/4W	
R702	1-249-417-11	CARBON	1K	5%	1/4W	
R703	1-249-433-11	CARBON	22K	5%	1/4W	
R704	1-249-397-11	CARBON	22	5%	1/4W	
R705	1-247-806-11	CARBON	91	5%	1/4W	
R711	1-249-428-11	CARBON	8.2K	5%	1/4W	
R712	1-247-856-00	CARBON	11K	5%	1/4W	
R713	1-249-441-11	CARBON	100K	5%	1/4W	
R714	1-249-425-11	CARBON	4.7K	5%	1/4W	
R715	1-249-441-11	CARBON	100K	5%	1/4W	
R716	1-247-886-11	CARBON	200K	5%	1/4W	
R717	1-249-422-11	CARBON	2.7K	5%	1/4W	
R718	1-247-903-00	CARBON	1M	5%	1/4W	
R719	1-249-417-11	CARBON	1K	5%	1/4W	
R720	1-247-883-00	CARBON	150K	5%	1/4W	
R721	1-249-437-11	CARBON	47K	5%	1/4W	
R722	1-249-429-11	CARBON	10K	5%	1/4W	
R723	1-249-441-11	CARBON	100K	5%	1/4W	
R724	1-249-438-11	CARBON	56K	5%	1/4W	
R725	1-247-885-00	CARBON	180K	5%	1/4W	
R726	1-249-437-11	CARBON	47K	5%	1/4W	
R727	1-249-441-11	CARBON	100K	5%	1/4W	
R728	1-247-854-11	CARBON	9.1K	5%	1/4W	
R729	1-247-894-11	CARBON	430K	5%	1/4W	
R730	1-249-441-11	CARBON	100K	5%	1/4W	
R731	1-215-457-00	METAL	33K	1%	1/6W	
R732	1-215-457-00	METAL	33K	1%	1/6W	
R733	1-247-895-00	CARBON	470K	5%	1/4W	
R734	1-249-417-11	CARBON	1K	5%	1/4W	
R735	1-249-417-11	CARBON	1K	5%	1/4W	
R736	1-249-429-11	CARBON	10K	5%	1/4W	
R743	1-215-438-00	METAL	5.1K	1%	1/6W	
R744	1-215-456-00	METAL	30K	1%	1/6W	
R745	1-215-454-00	METAL	24K	1%	1/6W	
R746	1-215-471-00	METAL	120K	1%	1/6W	
R747	1-249-431-11	CARBON	15K	5%	1/4W	
R748	1-249-422-11	CARBON	2.7K	5%	1/4W	
R749	1-247-834-11	CARBON	1.3K	5%	1/4W	
R750	1-249-414-11	CARBON	560	5%	1/4W	
R751	1-247-903-00	CARBON	1M	5%	1/4W	
R752	1-249-430-11	CARBON	12K	5%	1/4W	
R753	1-215-438-00	METAL	5.1K	1%	1/6W	
R754	1-215-456-00	METAL	30K	1%	1/6W	
R755	1-215-454-00	METAL	24K	1%	1/6W	
R756	1-215-471-00	METAL	120K	1%	1/6W	
R757	1-247-887-00	CARBON	220K	5%	1/4W	
R758	1-249-422-11	CARBON	2.7K	5%	1/4W	
R759	1-247-834-11	CARBON	1.3K	5%	1/4W	
R760	1-249-414-11	CARBON	560	5%	1/4W	
R761	1-247-903-00	CARBON	1M	5%	1/4W	
R762	1-249-422-11	CARBON	2.7K	5%	1/4W	
R763	1-249-422-11	CARBON	2.7K	5%	1/4W	
R764	1-247-887-00	CARBON	220K	5%	1/4W	
R765	1-249-395-11	CARBON	15	5%	1/4W	
R766	1-249-401-11	CARBON	47	5%	1/4W	
R768	1-249-405-11	CARBON	100	5%	1/4W	
R770	1-215-453-00	METAL	22K	1%	1/6W	
R771	1-215-453-00	METAL	22K	1%	1/6W	
R772	1-215-453-00	METAL	22K	1%	1/6W	
R773	1-215-453-00	METAL	22K	1%	1/6W	
R774	1-215-429-00	METAL	2.2K	1%	1/6W	
R775	1-215-457-00	METAL	33K	1%	1/6W	
R776	1-215-457-00	METAL	33K	1%	1/6W	
R777	1-215-457-00	METAL	33K	1%	1/6W	
R778	1-215-433-00	METAL	3.3K	1%	1/6W	
R779	1-247-868-11	CARBON	36K	5%	1/4W	
R780	1-249-435-11	CARBON	33K	5%	1/4W	
R781	1-247-876-11	CARBON	75K	5%	1/4W	
R782	1-249-435-11	CARBON	33K	5%	1/4W	
R783	1-249-417-11	CARBON	1K	5%	1/4W	
R784	1-249-429-11	CARBON	10K	5%	1/4W	
R785	1-249-410-11	CARBON	270	5%	1/4W	
R786	1-249-425-11	CARBON	4.7K	5%	1/4W	
R787	⚠1-212-861-11	FUSIBLE	15	5%	1/4W	F
R789	1-249-433-11	CARBON	22K	5%	1/4W	
R791	1-247-838-00	CARBON	2K	5%	1/4W	
R792	1-249-437-11	CARBON	47K	5%	1/4W	
R793	1-249-429-11	CARBON	10K	5%	1/4W	
R794	1-249-405-11	CARBON	100	5%	1/4W	
R801	1-249-435-11	CARBON	33K	5%	1/4W	
R802	1-249-435-11	CARBON	33K	5%	1/4W	
R803	1-249-435-11	CARBON	33K	5%	1/4W	
R805	1-249-437-11	CARBON	47K	5%	1/4W	
R806	1-249-437-11	CARBON	47K	5%	1/4W	
R807	1-249-441-11	CARBON	100K	5%	1/4W	
R808	1-249-441-11	CARBON	100K	5%	1/4W	
R809	1-249-437-11	CARBON	47K	5%	1/4W	
R810	1-249-405-11	CARBON	100	5%	1/4W	
R811	1-249-405-11	CARBON	100	5%	1/4W	
R821	1-249-441-11	CARBON	100K	5%	1/4W	
R851	1-215-457-00	METAL	33K	1%	1/6W	
R852	1-247-893-11	CARBON	390K	5%	1/4W	
R853	1-249-441-11	CARBON	100K	5%	1/4W	
R854	1-247-895-00	CARBON	470K	5%	1/4W	
R855	1-249-441-11	CARBON	100K	5%	1/4W	

VARIABLE RESISTOR

RV701	1-230-497-11	RES, ADJ, CARBON 20K
RV702	1-230-498-11	RES, ADJ, CARBON 50K
RV703	1-228-991-00	RES, ADJ, METAL GLAZE 2.2K
RV704	1-230-497-11	RES, ADJ, CARBON 20K
RV705	1-230-497-11	RES, ADJ, CARBON 20K

CRYSTAL

X801	1-567-094-00	VIBRATOR, CERAMIC (3.58MHz)
XF701	1-567-908-11	VIBRATOR, CRYSTAL (16.9344MHz)

****

*1-629-995-11 CD MOTOR BOARD
****

CONNECTOR

CN713 *1-566-003-11 PIN, CONNECTOR (PC BOARD) 6P

****

*1-638-104-11 GEQ VOL BOARD
****

CONNECTOR

CNP307 *1-566-970-11 HOUSING, CONNECTOR(PC BOARD)8P

VARIABLE RESISTOR

RV301 1-238-481-11 RES, VAR, SLIDE 50KX6 (GRAPHIC EQUALIZER/BALANCE)

****

Note:
The components identified by mark ⚠ or dotted line with mark ⚠ are critical for safety. Replace only with part number specified.

Note:
Les composants identifiés par une marque ⚠ sont critiques pour la sécurité. Ne les remplacer que par une pièce portant le numéro spécifié.

POWER | TC

Ref.No	Part No.	Description				Remark
	*1-629-992-11	POWER BOARD				
		**********				
		CAPACITOR				
C901	1-124-771-00	ELECT	6800MF	20%	25V	
C902	1-161-379-00	CERAMIC	0.01MF	30%	25V	
C903	1-161-494-00	CERAMIC	0.022MF	30%	25V	
C904	1-161-379-00	CERAMIC	0.01MF	30%	25V	
C905	1-161-379-00	CERAMIC	0.01MF	30%	25V	
		CONNECTOR				
CN903	*1-506-988-11	PIN, CONNECTOR (PC BOARD) 6P				
		DIODE				
D901	8-719-500-55	DIODE D3SBA10				
		JACK				
J901	⚠1-526-818-11	INLET, AC (~AC IN)				
		TRANSFORMER				
T902	⚠1-424-150-11	TRANSFORMER, LINE FILTER				

****

	*1-638-105-11	TC BOARD				
		*******				
		CAPACITOR				
C350	1-124-927-11	ELECT	4.7MF	20%	50V	
		CONNECTOR				
CNP308	*1-566-779-11	PIN, CONNECTOR (PC BOARD) 4P				
CNP310	*1-569-750-11	PIN, CONNECTOR (PC BOARD) 8P				
CNP312	*1-560-456-00	PIN, CONNECTOR 2P				
		TRANSISTOR				
Q314	1-807-868-11	TRANSISTOR KSR1006				
Q315	1-807-868-11	TRANSISTOR KSR1006				
Q316	8-729-119-78	TRANSISTOR 2SC2785-HFE				
Q317	8-729-115-30	TRANSISTOR 2SK105A-30				
		RESISTOR				
R333	1-249-417-11	CARBON	1K	5%	1/4W	
R334	1-249-427-11	CARBON	6.8K	5%	1/4W	
R335	1-249-429-11	CARBON	10K	5%	1/4W	
R352	1-249-423-11	CARBON	3.3K	5%	1/4W	
		VARIABLE RESISTOR				
RV303	1-241-037-21	RES, ADJ, CARBON 2.2K				
RV304	1-241-037-21	RES, ADJ, CARBON 2.2K				

Ref.No	Part No.	Description	Remark
		MISCELLANEOUS	
		**********	
	1-452-531-11	MAGNET	
	⚠8-848-137-11	DEVICE, OPTICAL KSS-150B(J)	
ANT1	1-501-383-21	ANTENNA, TELESCOPIC	
F901	⚠1-576-030-11	FUSE, GLASS TUBE (5A,125V)	
HE301	1-543-525-11	HEAD, MAGNETIC (ERASE)	
HP301	1-543-628-11	HEAD, MAGNETIC (REC/PB)	
HRP301	1-543-628-11	HEAD, MAGNETIC (REC/PB)	
M301	X-4920-924-1	MOTOR ASSY	
M702	1-541-352-11	MOTOR, SPINDLE	
M703	X-2641-357-1	MOTOR ASSY, SLED	
S304	1-571-330-21	SWITCH, LEAF (MD (A) POWER)	
S305	1-571-890-11	SWITCH, LEAF (REC PROOF)	
S306	1-571-330-21	SWITCH, LEAF (MD (B) POWER)	
S307	1-571-890-11	SWITCH, LEAF (120μ/70μ)	
S801	1-570-822-21	SWITCH, LEAF (OPEN DET)	
S802	1-571-936-11	SWITCH, LEAF (LIMIT IN)	
T901	⚠1-449-613-11	TRANSFORMER, POWER	

ACCESSORIES & PACKING MATERIALS
****

	⚠1-557-287-11	CORD, POWER
	*3-365-849-01	INDIVIDUAL CARTON....(US)
	*3-365-849-11	INDIVIDUAL CARTON....(Canadian)
	3-752-746-21	MANUAL, INSTRUCTION (ENGLISH)
	3-752-746-31	MANUAL, INSTRUCTION (FRENCH)....(Canadian)
	*4-934-506-01	CUSHION (UPPER LEFT)
	*4-934-508-01	CUSHION (LOWER LEFT)

HARDWARE LIST
****

#1	7-685-104-19	SCREW +P 2X6 TYPE2 NON-SLIT
#2	7-685-132-19	SCREW +P 2.6X5 TYPE2 NON-SLIT
#3	7-685-648-79	SCREW, TAPPING +BV 3X12
#4	7-621-770-87	SCREW +B2.6X5
#5	7-685-133-19	SCREW +P 2.6X6 TYPE2 SLIT
#6	7-682-549-04	SCREW +B 3X10
#7	7-685-647-79	SCREW +BTP 3X10 TYPE2 N-S
#9	7-621-772-10	SCREW +B 2X4
#11	7-621-255-25	SCREW +BVTT 2X4 (S)
#12	7-621-255-15	SCREW +P 2X3
#13	7-621-255-45	SCREW +PTT 2X6 (S)
#15	7-685-144-19	SCREW +P 3X5 TYPE2 NON-SLIT
#16	7-682-548-04	SCREW +BVTT 3X8 (S)
#17	7-685-646-79	SCREW +BVTP 3X8 TYPE2 IT-3

Note: The components identified by mark ⚠ or dotted line with mark ⚠ are critical for safety. Replace only with part number specified.	**Note:** Les composants identifiés par une marque ⚠ sont critiques pour la sécurité. Ne les remplacer que par une pièce portant le numéro spécifié.

CFD-460

SONY®
SERVICE MANUAL

US Model
Canadian Model

SUPPLEMENT-1

File this supplement with the service manual.

Subject : Change the CD main board

ELECTRICAL PARTS LIST

DIFFERENCE BETWEEN NEW AND FORMER TYPES

New Type						Former Type				
Ref.No.	Part No.	Description			Remark	Part No.	Description			Remark
		<CAPACITOR>					<CAPACITOR>			
C735	1-124-252-00	ELECT	0.33uF	20%	50V	1-162-284-31	CERAMIC	150PF	10%	50V
		<IC>					<IC>			
IC702	8-759-061-38	IC KA8309				8-752-037-48	IC CXA1182Q-Z			
IC703	8-759-061-39	IC KS5990				8-752-328-46	IC CXD1130Q			
IC704	DELETE					8-759-984-09	IC LH5116NA-10			
		<RESISTOR>					<RESISTOR>			
R714	1-249-427-11	CARBON	6.8K	5%	1/4W	1-249-425-11	CARBON	4.7K	5%	1/4W
R716	1-247-883-00	CARBON	150K	5%	1/4W	1-247-886-11	CARBON	200K	5%	1/4W
R717	1-215-427-00	METAL	1.8K	1%	1/4W	1-249-422-11	CARBON	2.7K	5%	1/4W
R721	1-249-438-11	CARBON	56K	5%	1/4W	1-249-437-11	CARBON	47K	5%	1/4W
R724	1-249-439-11	CARBON	68K	5%	1/4W	1-249-438-11	CARBON	56K	5%	1/4W
R731	1-215-461-00	METAL	47K	1%	1/4W	1-215-457-00	METAL	33K	5%	1/4W
R732	1-215-461-00	METAL	47K	1%	1/4W	1-215-457-00	METAL	33K	5%	1/4W
R795	1-249-437-11	CARBON	47K	5%	1/4W	————				

DIAGRAMS

SCHEMATIC DIAGRAM —CD SECTION—

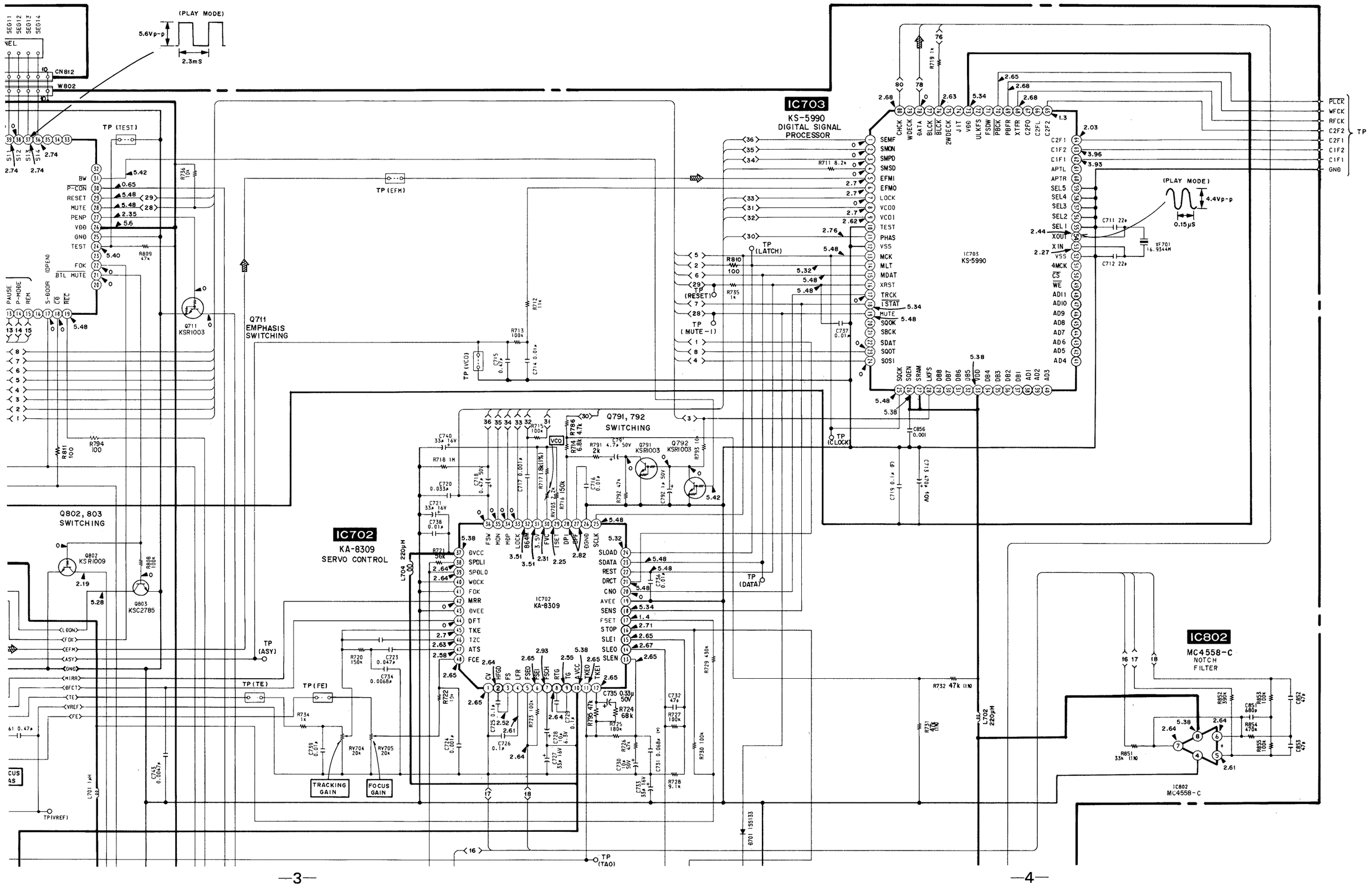

PRINTED WIRING BOARD —CD SECTION—

【CD MAIN BOARD】

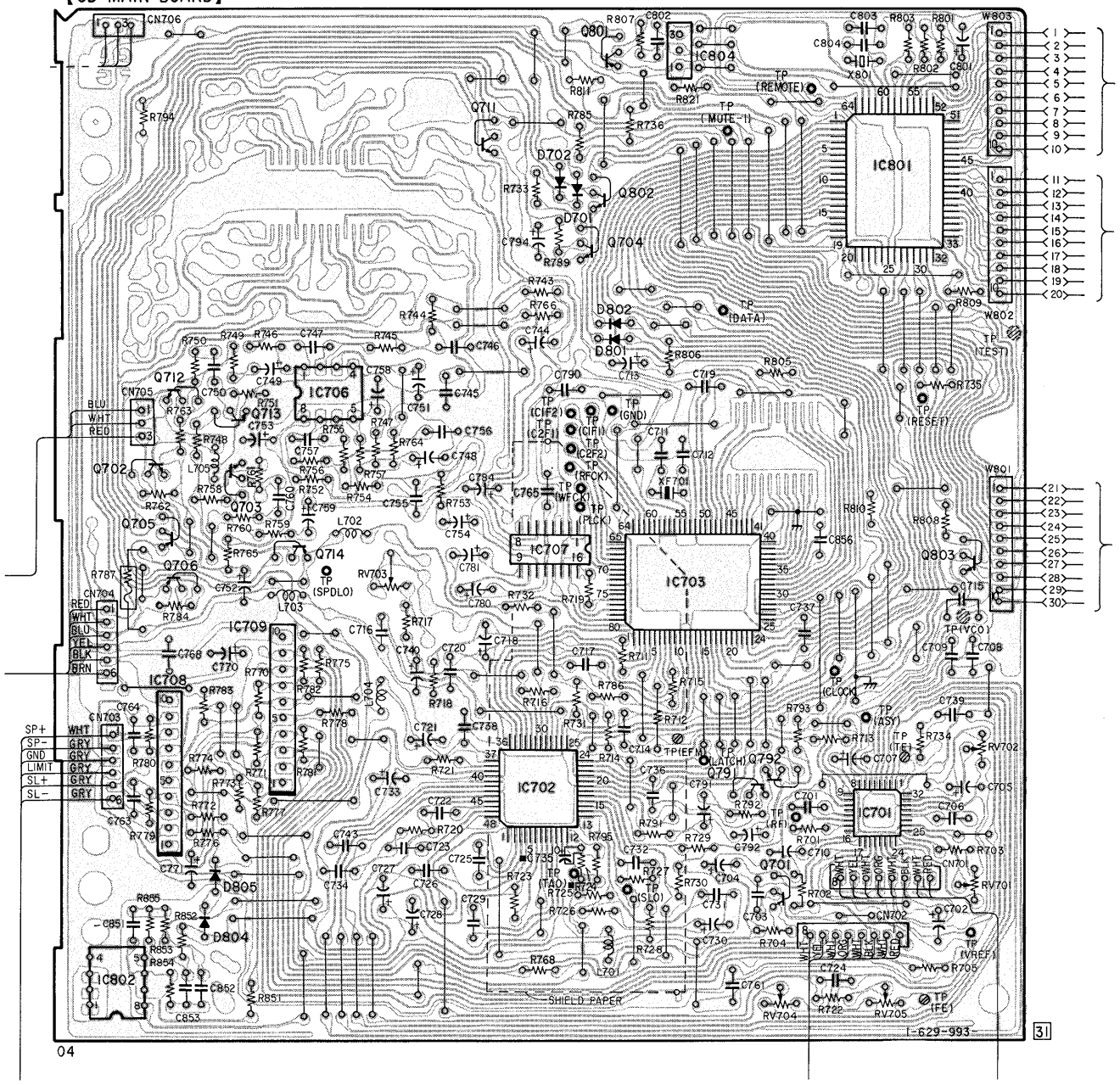

9-956-168-12
(with 9-956-168-81)

Sony Corporation
General Audio Group

English
94C04024-1 (2)
Printed in Japan
© 1991. 1
Published by Audio Sector Quality Assurance Dept.